# R60 User Manual

v.25111

# Contents


**1 Introduction** ..... **1**
**2 Safety** ..... **2**
2.1 Anti-Static Precautions ..... 2
2.2 Personal Protective Equipment (PPE) ..... 2
2.3 Handling the System ..... 2
**3 Recommended Tools** ..... **2**
**4 Specifications** ..... **3**
**5 Space Requirements** ..... **5**
**6 Buttons and LED Indicators** ..... **6**
6.1 Front Indicators and Buttons ..... 6
**7 Racking Procedure** ..... **7**
7.1 Remove Chassis Rail from Rack Rail ..... 7
7.2 Install the Chassis Rail on the System ..... 8
7.3 Install the Rack Rail in the Rack ..... 10
7.4 Install the System in the Rack ..... 11
7.5 Secure the System to the Rack ..... 12
7.6 Install Cables ..... 13
7.6.1 100GbE and 200GbE NIC Cabling ..... 14
7.6.2 400GbE NIC Cabling ..... 15
7.6.3 SAS Cabling ..... 16
7.7 Boot the System ..... 17
**8 Storage Expansion** ..... **18**
8.1 ES24N ..... 18
8.2 ES60 ..... 19
**9 Unracking Procedure** ..... **21**
9.1 Uninstall Cables ..... 21
9.1.1 Disconnect 100GbE NIC Cabling ..... 21
9.1.2 Disconnect 400GbE NIC Cabling ..... 22
9.1.3 Disconnect SAS HBA Cabling ..... 23
9.2 Release the System from the Rack ..... 24
9.3 Remove the System from the Rack ..... 25
9.4 Uninstall the Rack Rails from the Rack ..... 26
9.5 Uninstall the Chassis Rail from the System ..... 27
**10 Drive Replacement** ..... **28**
10.1 Remove Drive Tray ..... 28
10.2 Replace NVMe Drive ..... 29
10.3 Install Drive Tray ..... 30
**11 Additional Resources** ..... **31**
**12 Contact Us** ..... **31**


Copyright © 2026 iXsystems, Inc. dba TrueNAS. All rights reserved. All trademarks are the property of their respective owners.

# 1 Introduction

The TrueNAS R60 is a 1U, 12-bay NVMe storage array with redundant power supplies.

Your system comes with the TrueNAS operating system preloaded.

Review the safety considerations and requirements before interacting with the H-Series.

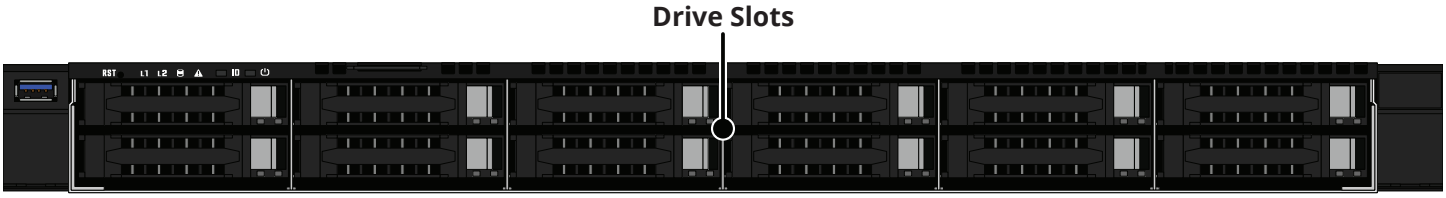


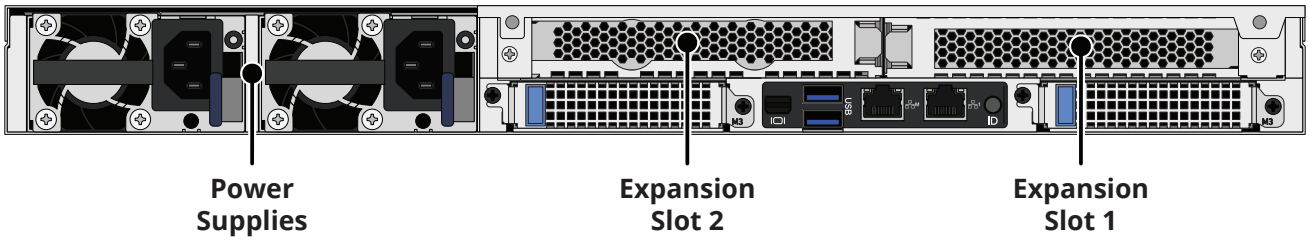


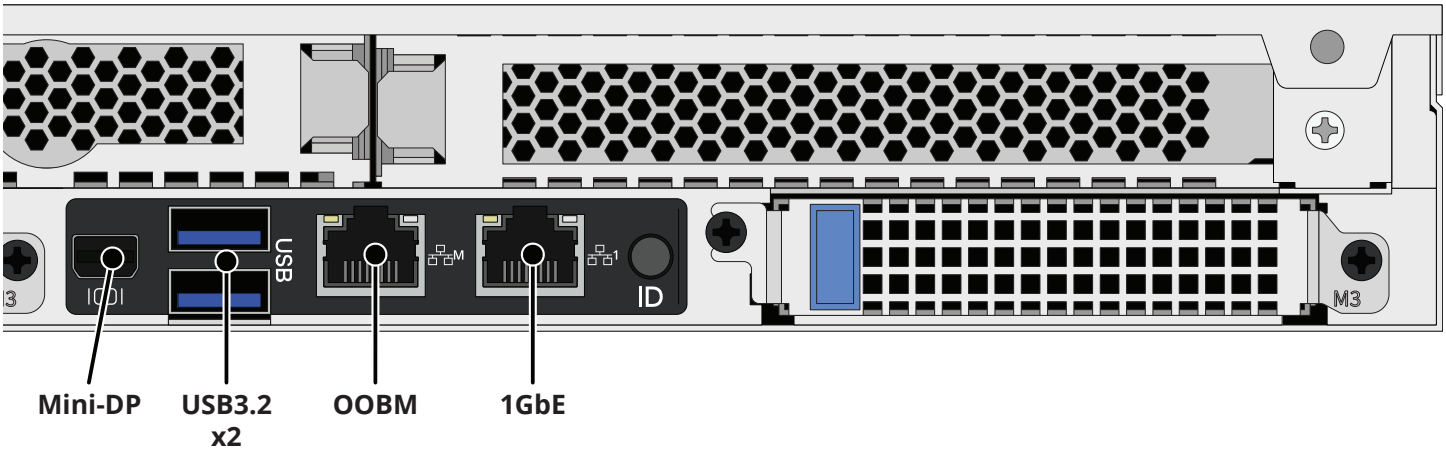

# 2 Safety

## 2.1 Anti-Static Precautions

**Warning - Electrostatic Discharge (ESD)**

Static electricity can build up in your body and discharge when touching conductive materials. Electrostatic Discharge (ESD) is harmful to sensitive electronic devices and components. Keep these safety recommendations in mind before opening the system case or handling non-hot-swappable system components.

- Turn off the system and remove power cables before opening the case or touching internal components.
- Place the system on a clean, hard work surface like a wooden tabletop. Use an ESD dissipative mat if possible to protect the internal components.
- Touch the metal chassis with your bare hand to dissipate static electricity in your body before handling any internal components, including components not yet installed in the system. We always recommend wearing an anti-static wristband and using a grounding cable.
- Store all system components in anti-static bags.

## 2.2 Personal Protective Equipment (PPE)

**Warning - PPE**

Wear proper PPE, like anti-static wrist straps and smocks before touching any sensitive equipment inside the chassis. If you are unsure how to properly replace any parts, contact iXsystems Support.

## 2.3 Handling the System

Hold the system from the sides or bottom whenever possible. Always be mindful of loose cabling or connectors, and avoid pinching or bumping these elements.

These instructions use “left” and “right” according to your perspective when facing the system or rack.

**Warning - Damage or Injury**

The R60 weighs approximately 50 lbs (23 kg) when fully populated and requires a minimum of **two** people to lift.

When handling rails, system components, or drives, never force movement if a component seems stuck. Gently remove the component and check for pinched cables or obstructing material before installing it again. Installing a component with excessive force can damage the system or cause personal injury.

# 3 Recommended Tools

We recommend these tools when interacting with the TrueNAS R60:

- Long #2 Phillips head screwdriver
- Tape measure
- Level

# 4 Specifications

| R60 Components | |
|---|---|
| Drive Count | 12 2.5-inch NVMe SSDs |
| Cooling Fans | 8 |
| Power Supplies (200v) | 2 |
| Power Distribution Requirements | 200V - 240V |
| Processor | Hexadeca-Core or Dotriaconta-core |
| RAM | 192 - 384 GB |
| Onboard Networking | 1x 1GbE |
| Additional Networking 1 (Optional) | 2x 100 GbE |
| Additional Networking 2 (Optional) | 1x 400 GbE |
| Max Storage (Raw) | 3.6 PB |
| Storage Expansion | 2x ES24N or ES60 |

| R60 Dimensions and Weight | |
|---|---|
| Dimensions (H x W x L) | 1.7 in x 17.2 in x 27.95 in (43.5 mm x 438 mm x 710 mm) |
| Length with Chassis Rail | 33 in (838.2 mm) |
| Net Weight (Fully Loaded) | 50 lbs (23 kg) |

| R60 Environmental Specifications | |
|---|---|
| Operating Temperature | 50°F - 95°F (10°C - 35°C) |
| Non-Operating Temperature | -40°F - 140°F (-40°C - 60°C) |
| Operating Humidity (non-condensing) | 8% - 80% |
| Supply Voltage | 100-127~/12A, 200-240V~/8A 47-63 hz<br>or<br>100-127/200-240V~,12/8A 50-60 Hz |

## Compliance

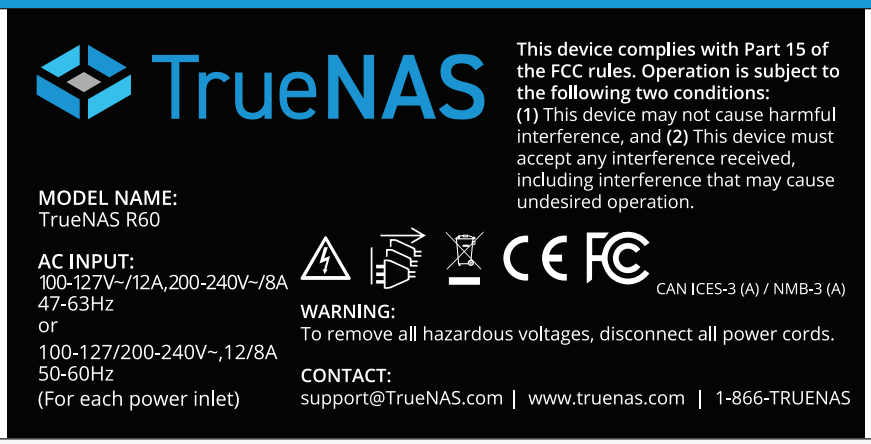


The TrueNAS R60 is a **network storage server** intended for use in **enterprise and data center environments**.

**The apparatus is designed to be operated:**
- In controlled IT environments, within the specified ranges for temperature, humidity, and supply voltage
- In properly grounded electrical installations, in accordance with local electrical codes
- In accordance with the TrueNAS software documentation, including configuration, operation, and maintenance instructions

**This product is not designed or intended for:**
- Use in life-support systems or other safety-critical applications where failure could result in injury or loss of life
- Use in residential consumer environments, unless explicitly installed and operated in a controlled, non-domestic IT setting
- Any application outside the conditions and purposes described in this manual and the TrueNAS software documentation

For detailed configuration and operational guidance, refer to the TrueNAS software documentation provided with the product and available from TrueNAS.

The R60 is FCC/CE-marked and complies with:
- **FCC 47 CFR Part 15, Class A -** Radiated and conducted emissions limits for commercial IT equipment (EMI/EMC)
- **Low Voltage Directive (LVD) 2014/35/EU** - Electrical safety
- **Electromagnetic Compatibility (EMC) Directive 2014/30/EU -** Electromagnetic interference and immunity
- **RoHS Directive 2011/65/EU, as amended by (EU) 2015/863** - Restriction of hazardous substances
- **WEEE Directive 2012/19/EU -** Waste electrical and electronic equipment

For regulatory or compliance-related queries, contact compliance@truenas.com.
EU Authorized Representative: Obelis S.A. - Boulevard Général Wahis 53, B-1030 Brussels, BELGIUM

### ⓘ Important - Battery Information

This product contains a lithium coin cell (CMOS battery) used to maintain system settings. Do not dispose of the battery with household waste. Used batteries must be collected and disposed of separately in accordance with local regulations and the EU Battery Directive 2006/66/EC. The crossed-out wheeled bin symbol indicates that the battery must be taken to an appropriate collection facility for recycling.

# 5 Space Requirements

This document guides you through racking your system and accessing the TrueNAS web UI.

See the back page of this document for guidance on where to access in-depth product information and setup recommendations.

**ⓘ Note - Rack Space**

The R60 requires 1U of rack space and a #2 Phillips head screwdriver to install in a rack.

The system is 27.9” (71 cm) long. Rack posts must be 25.5” - 33” (64.8 cm - 83.8 cm) apart to install the rail kit.

You must have at least 32” (81.3 cm) of space in front of the rack to safely install the R60.

You must also have at least 30” (76.2) of space behind the rack to install the cables.

**ⓘ Important - Damage or Injury**

When handling rails, system components, or drives, never force movement if a part seems stuck or does not insert properly. Gently remove the part and check for pinched cables or obstructing material before installing it again. Installing a part with excessive force can damage the system or cause personal injury.

**Warning - Team Lift**

The R60 requires two people to lift safely. Failure to follow safety recommendations can lead to severe system damage or personal injury.

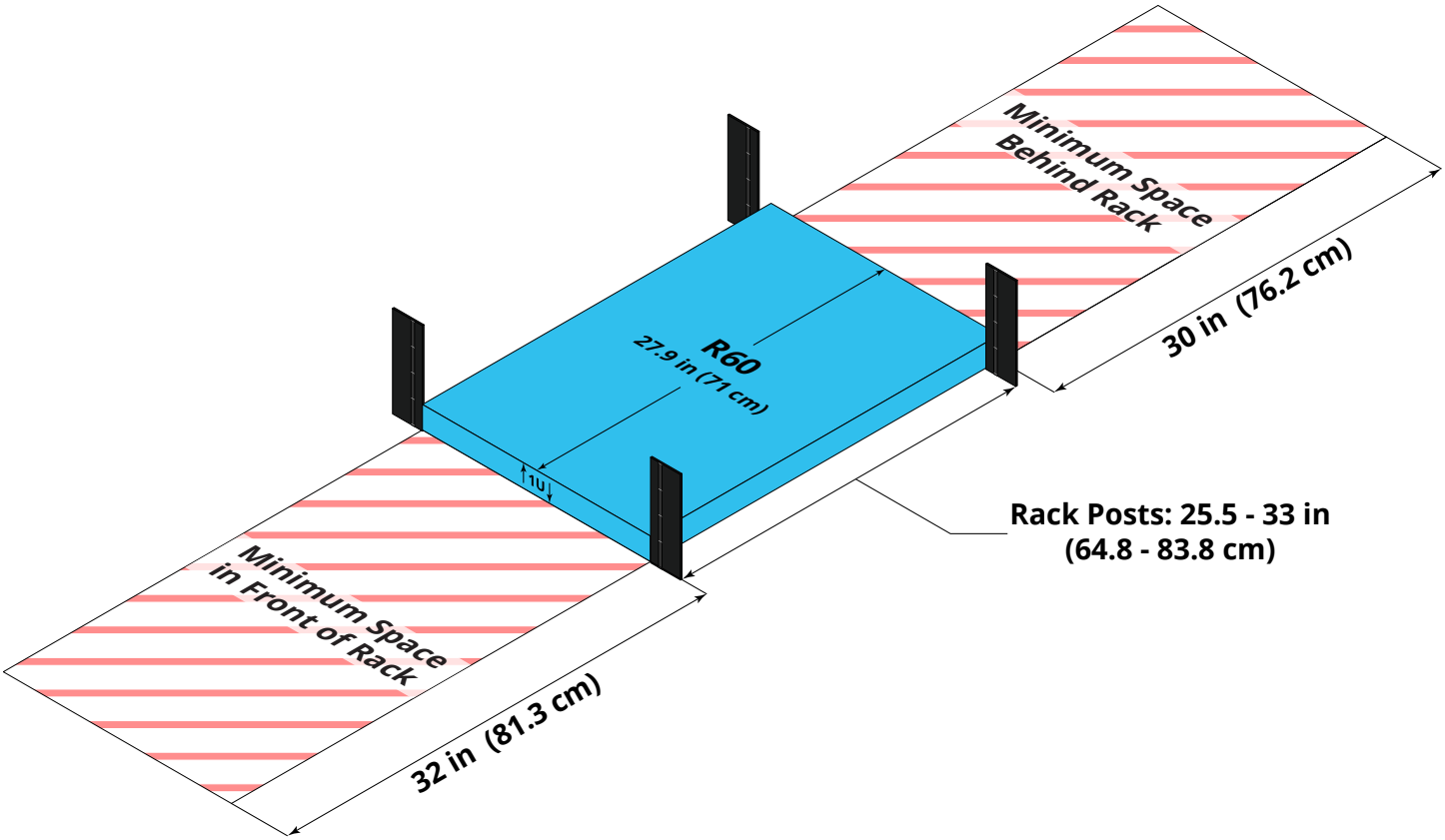

# 6 Buttons and LED Indicators

## 6.1 Front Indicators and Buttons

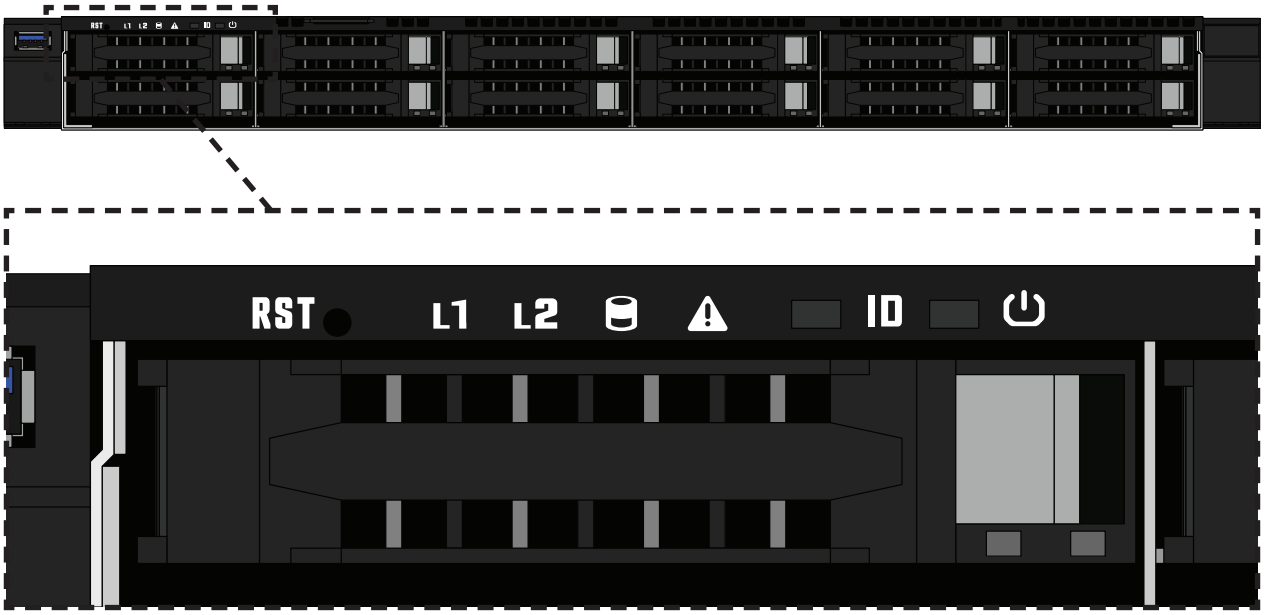


| Light / Button | Function | Color and Indication |
|---|---|---|
| RST | Resets the system | N/A |
| L1 | N/A | Amber (Flashing): Link Active |
| L2 | N/A | Amber (Flashing): Link Active |
| | N/A | Green (Flashing): Drive Activity |
| | N/A | Red (Flashing): Component Fault |
| ID | Activates Locate ID | Blue (Flashing): Locate ID active |
| | Powers the system on/off | Blue (Solid): System Ready |

| Light | Color and Indication |
|---|---|
| Left | Green (Solid): Disk Present |
| Right | Green (Solid): Locate ID Active<br>Green (Blinking): Disk Activity<br>Amber (Solid): Drive Fault |

# 7 Racking Procedure

## 7.1 Remove Chassis Rail from Rack Rail

The rail kit separates into two pieces, the inner chassis rail and the outer rack rail.

Slide the inner chassis rail out of the rack rail until it stops, then pull the white tab and remove the chassis rail.

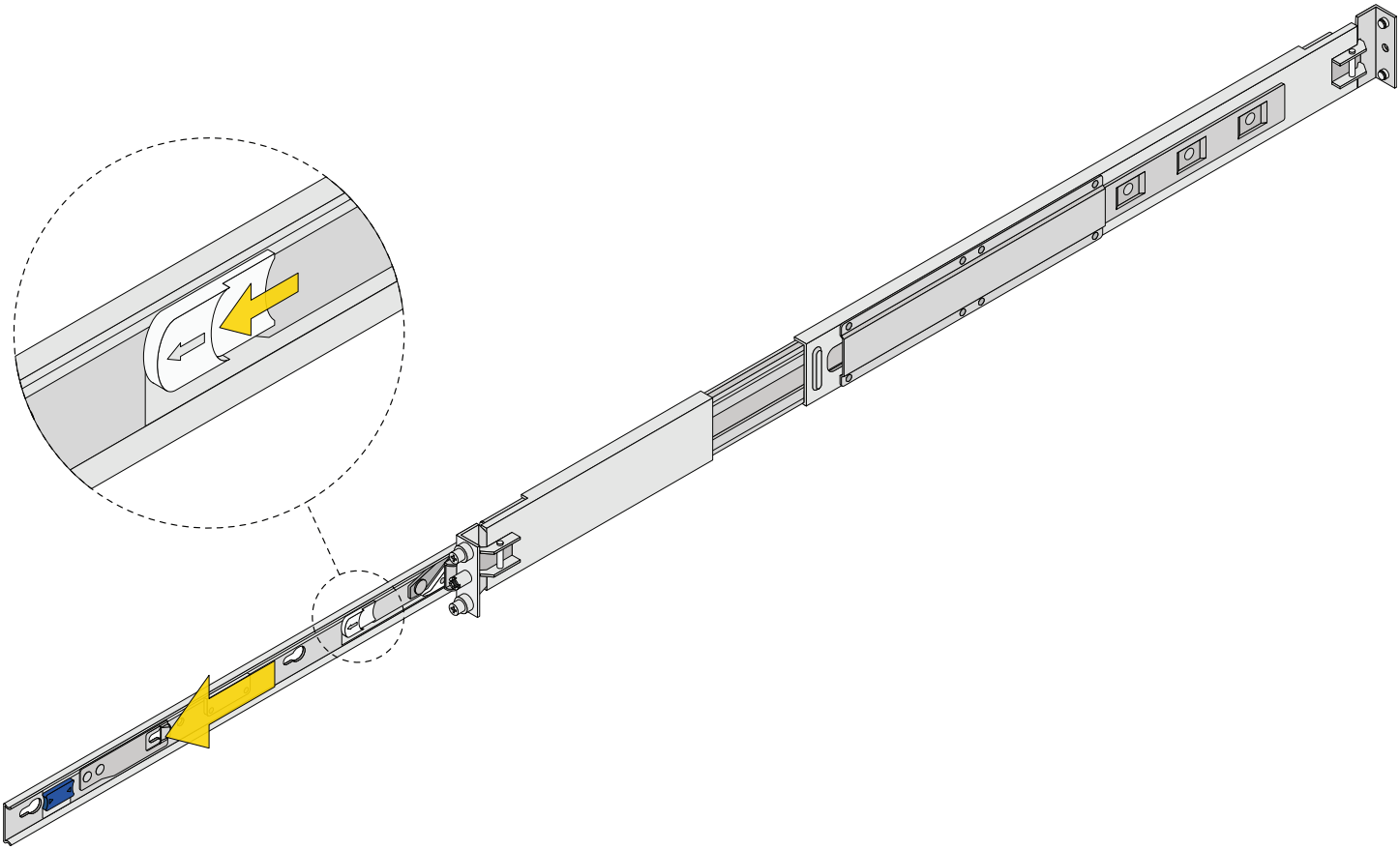

## 7.2 Install the Chassis Rail on the System

Fit the rail keyholes over the mounting pegs on the system and slide the rail toward the back of the system until it locks. Repeat the process for the second chassis rail.

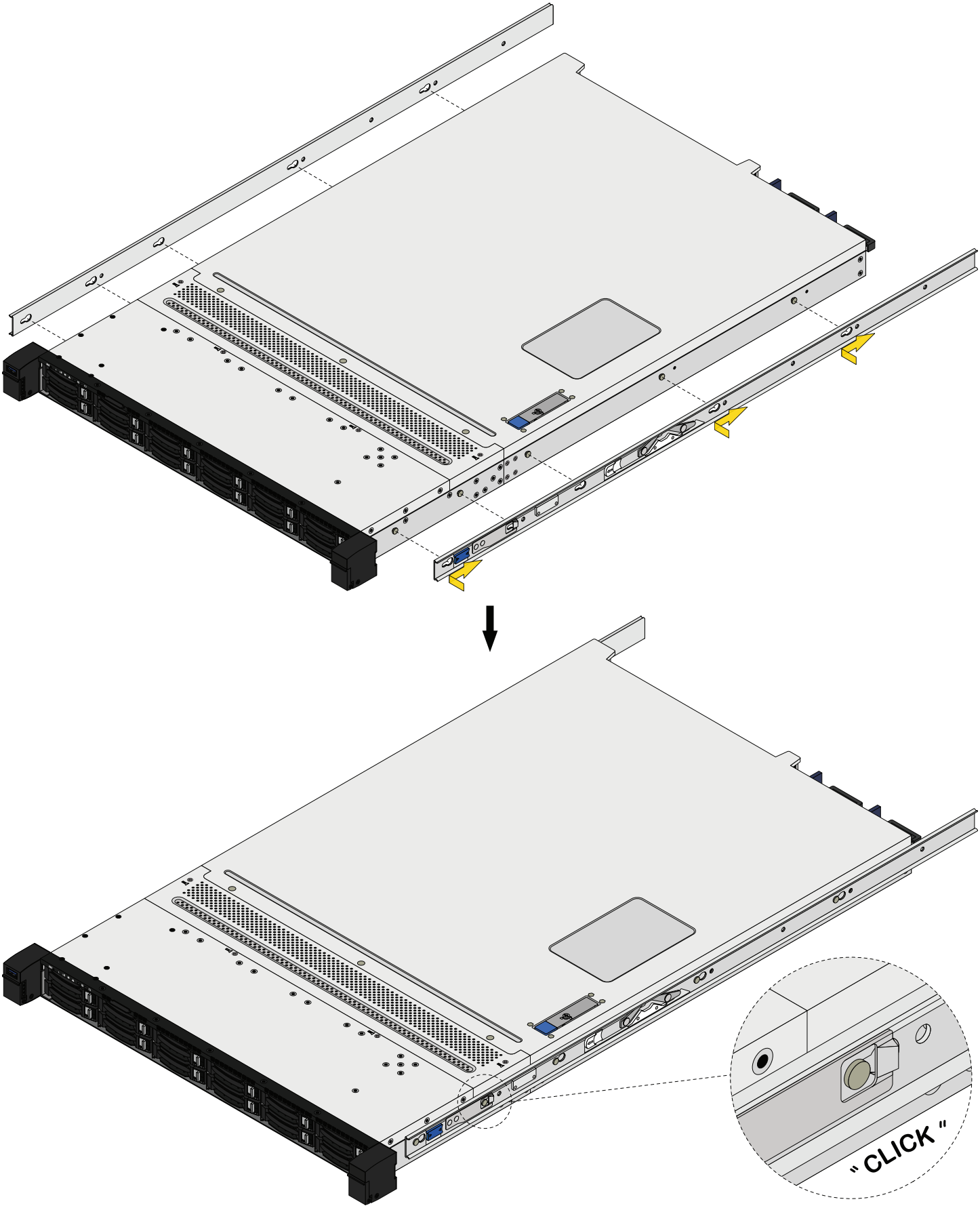

Use two round M4 rail screws to secure the rail to the chassis. Repeat the process for the second chassis rail.

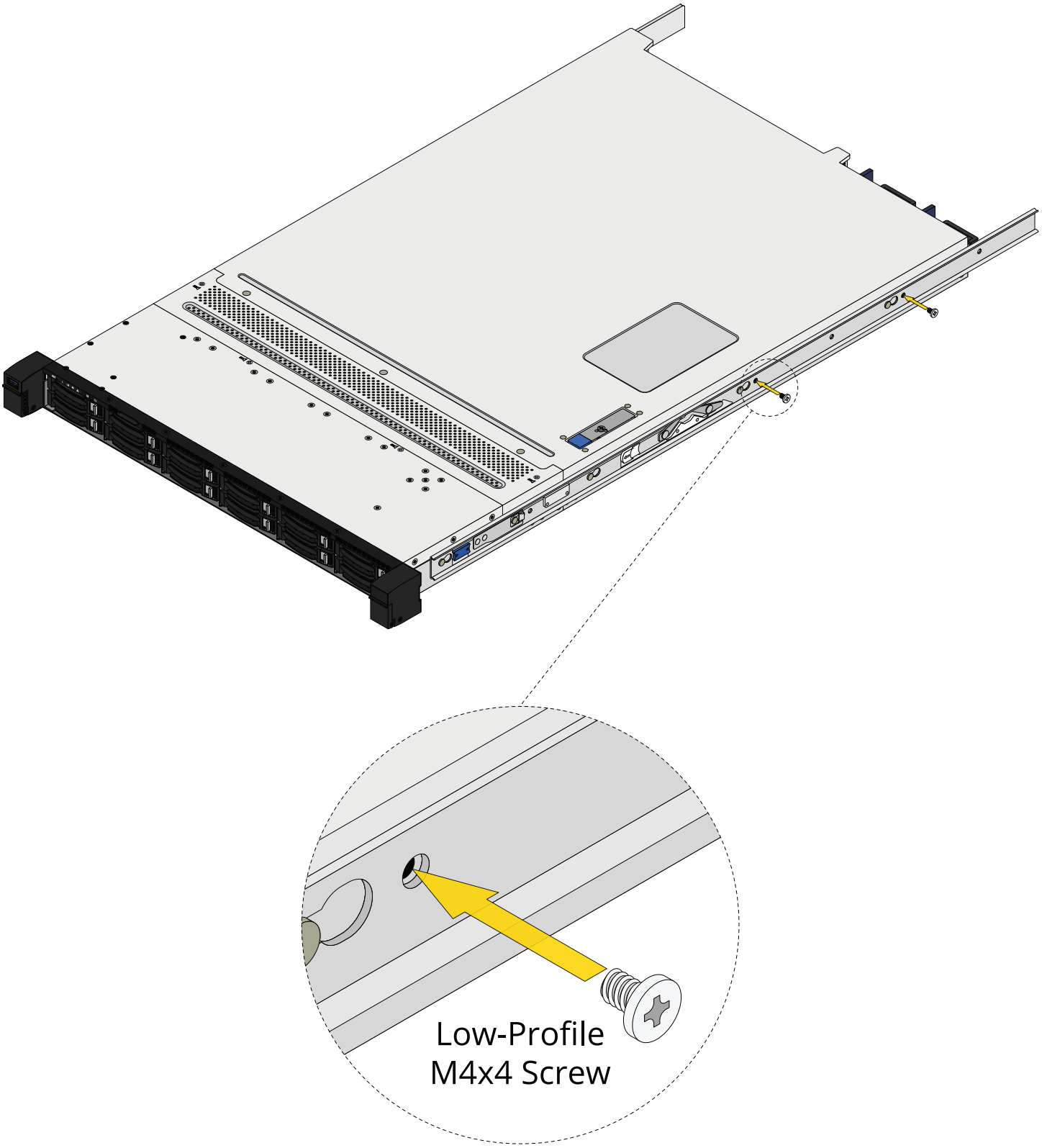

## 7.3 Install the Rack Rail in the Rack

Align the rail end stamped “FRONT” with the front of the rack. Face the “FRONT” text inside the rack so the chassis rails can slide into the rack rails. Align the rail front pegs with the top and bottom holes in the bottom 1U and push the rail into the holes until the spring latch locks the rail in place.

After you install the front of the rail, extend the back of the rack rail towards the equivalent attach points on the rear rack post. Make sure the rail remains level from front to back. Secure the back of the rail to the rear rack post using a round M5 rack screw. Repeat this process to install the other rack rail.

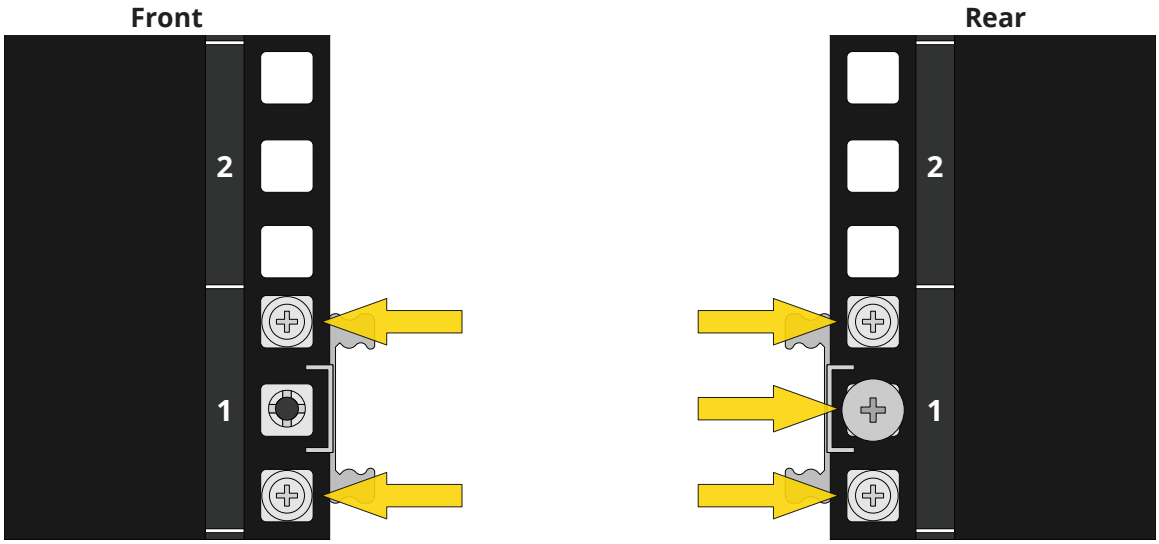


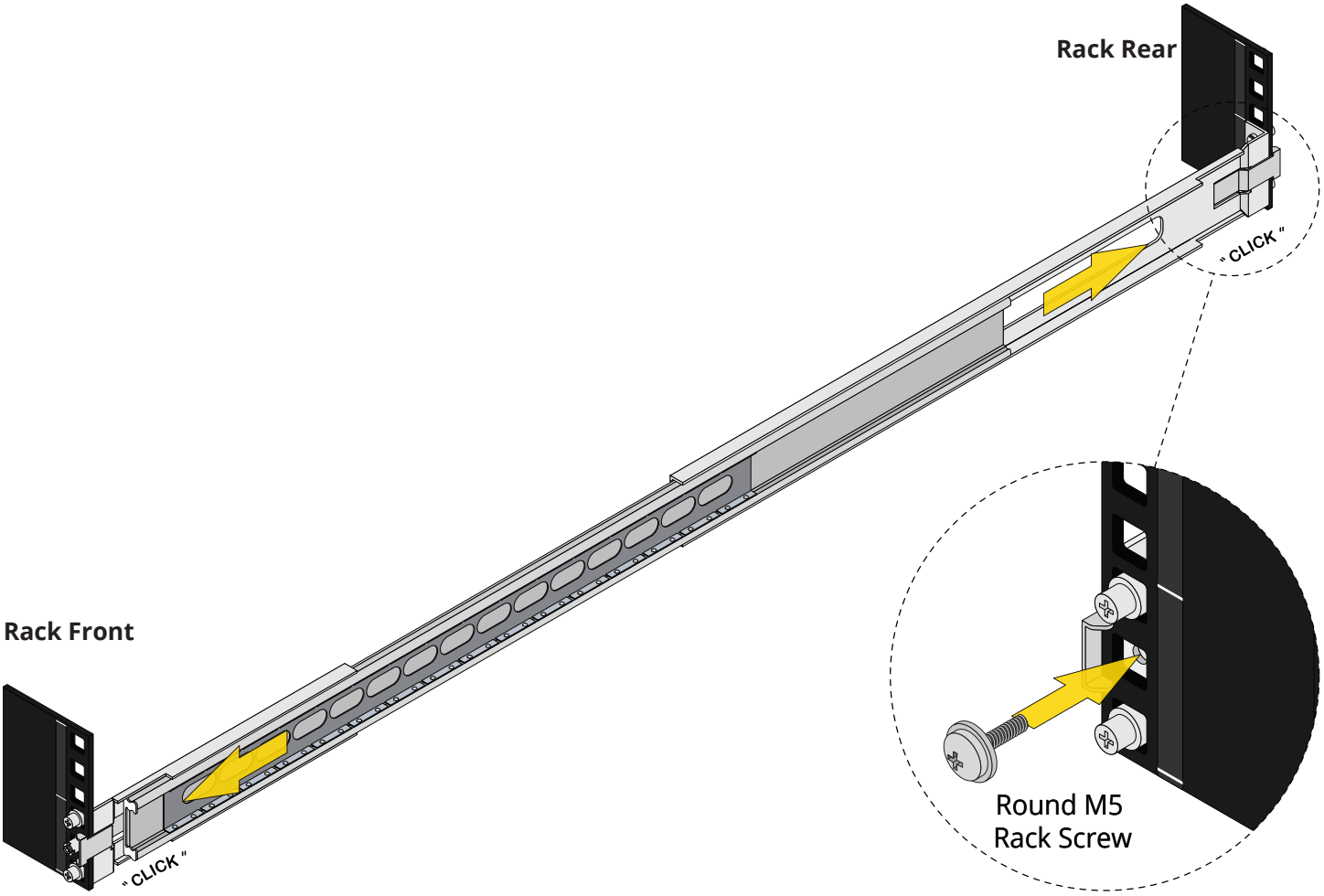

## 7.4 Install the System in the Rack

Team-lift the system and align the chassis rails with the rack rails. Slide the ends of the chassis rails into the rack rails and push the system into the rack until the metal safeties click and lock.

Pull the blue release tabs towards the front of the system and finish pushing the system into the rack.

**Warning - Pinch Point**

The R60 can pinch or crush fingers when sliding the rail sleeves onto the rack rails.

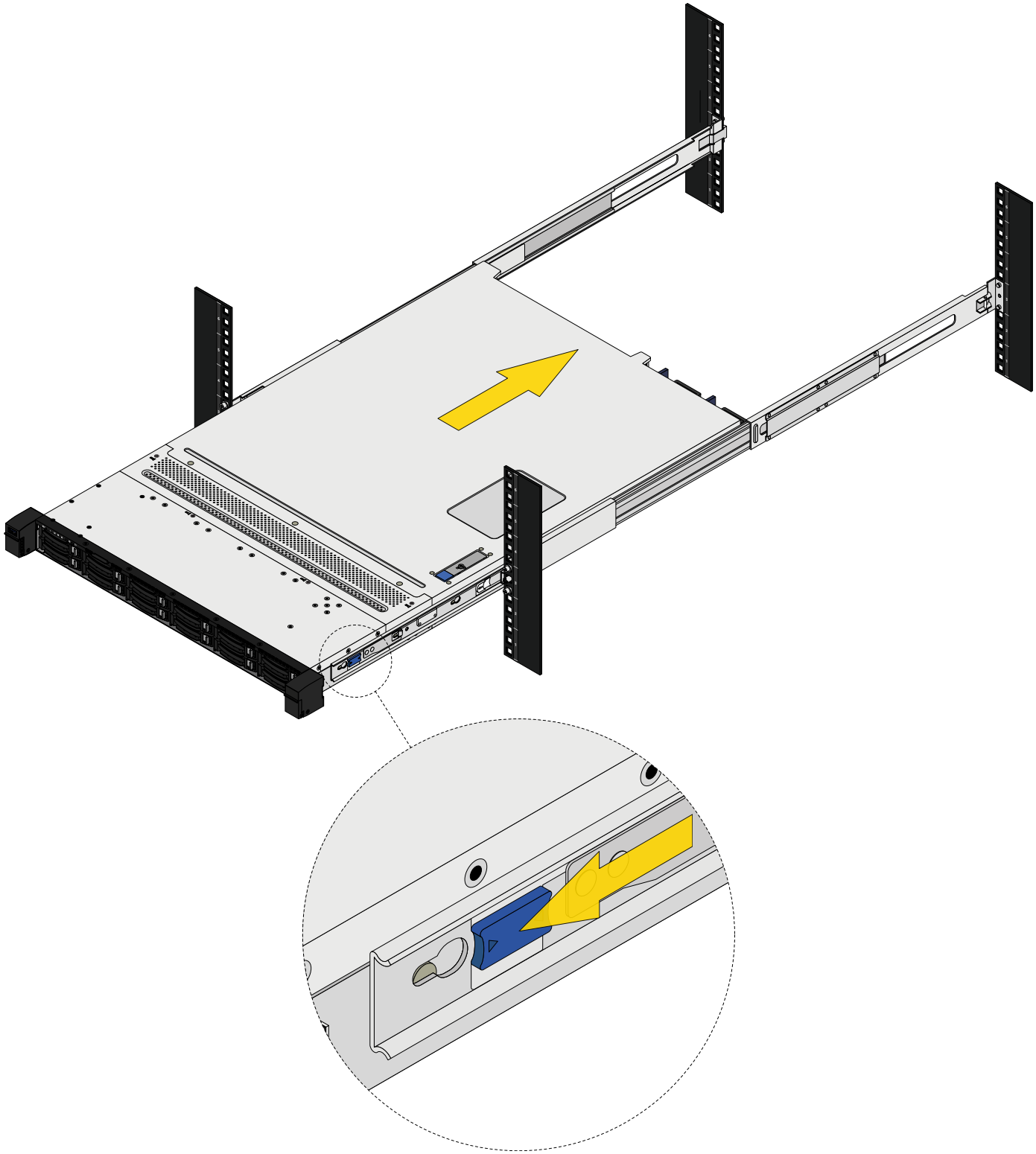

## 7.5 Secure the System to the Rack

Open the doors on the R60 ears and tighten the captive screws to secure each system ear to the rack.

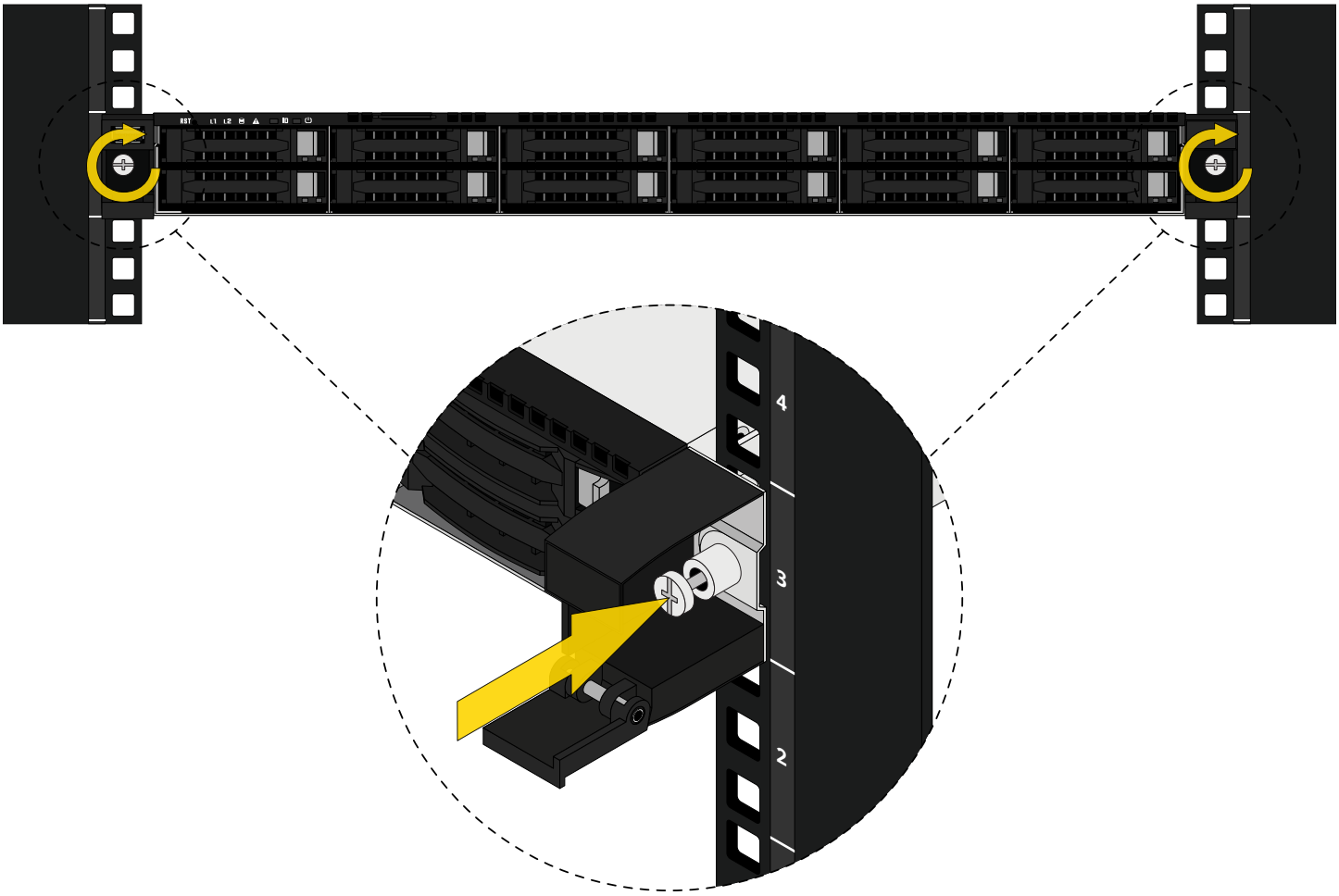

## 7.6 Install Cables

Connect one ethernet network cable from your local switch or management network to the Out-of-Band Management (M) port, and another one to the 1GbE port (1).

Next, connect a monitor and keyboard to the Mini-DP and USB ports.

Finally, connect the power cables **to both power supplies**, then plug them into a power distribution unit.

**Warning - Grounded Connection**

Always connect power cords to properly grounded connections.

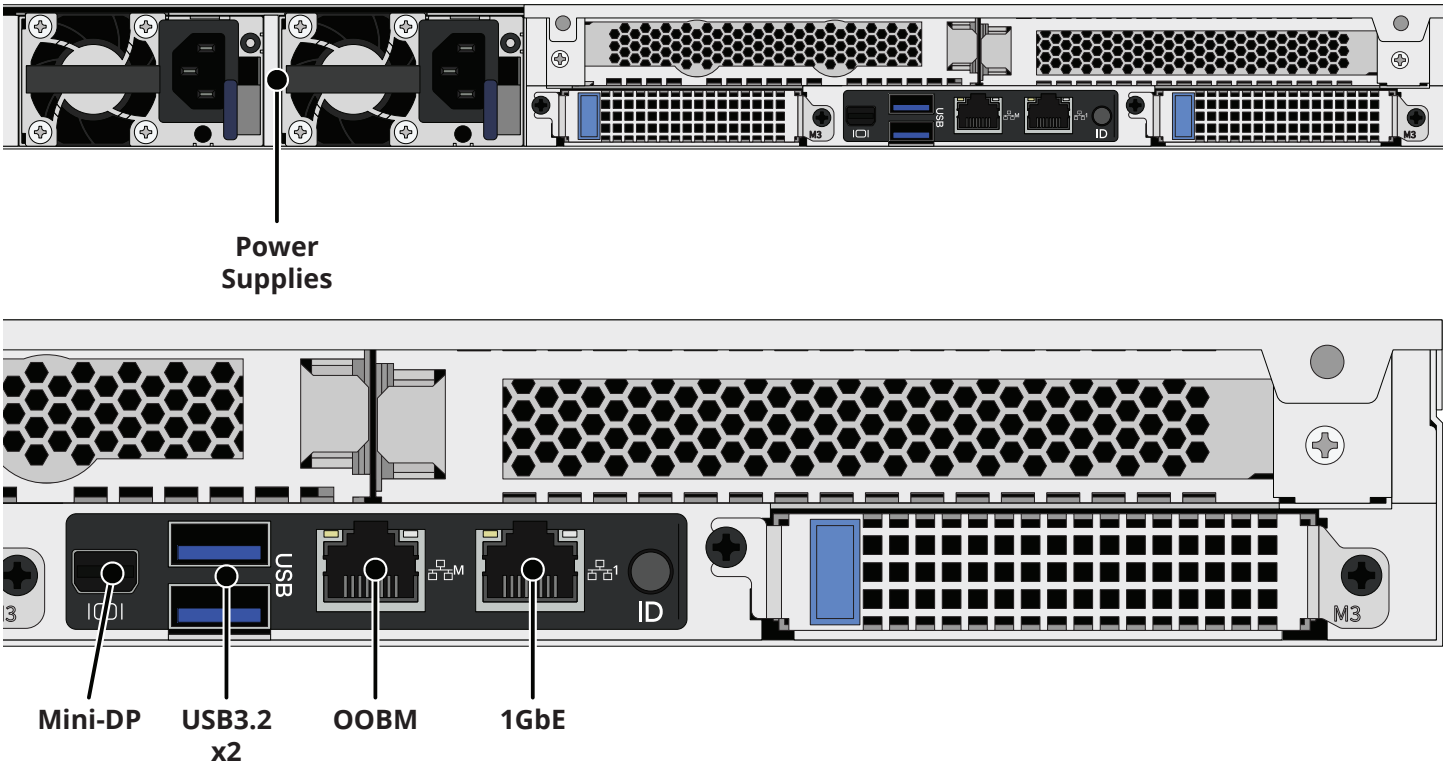

### 7.6.1 100GbE and 200GbE NIC Cabling

If you ordered your system with a 100GbE NIC, you can connect the cables now.

Insert SR4 optics into the first port with the gold connectors facing down, then plug the fiber cable into the optics.

Repeat for the other port.

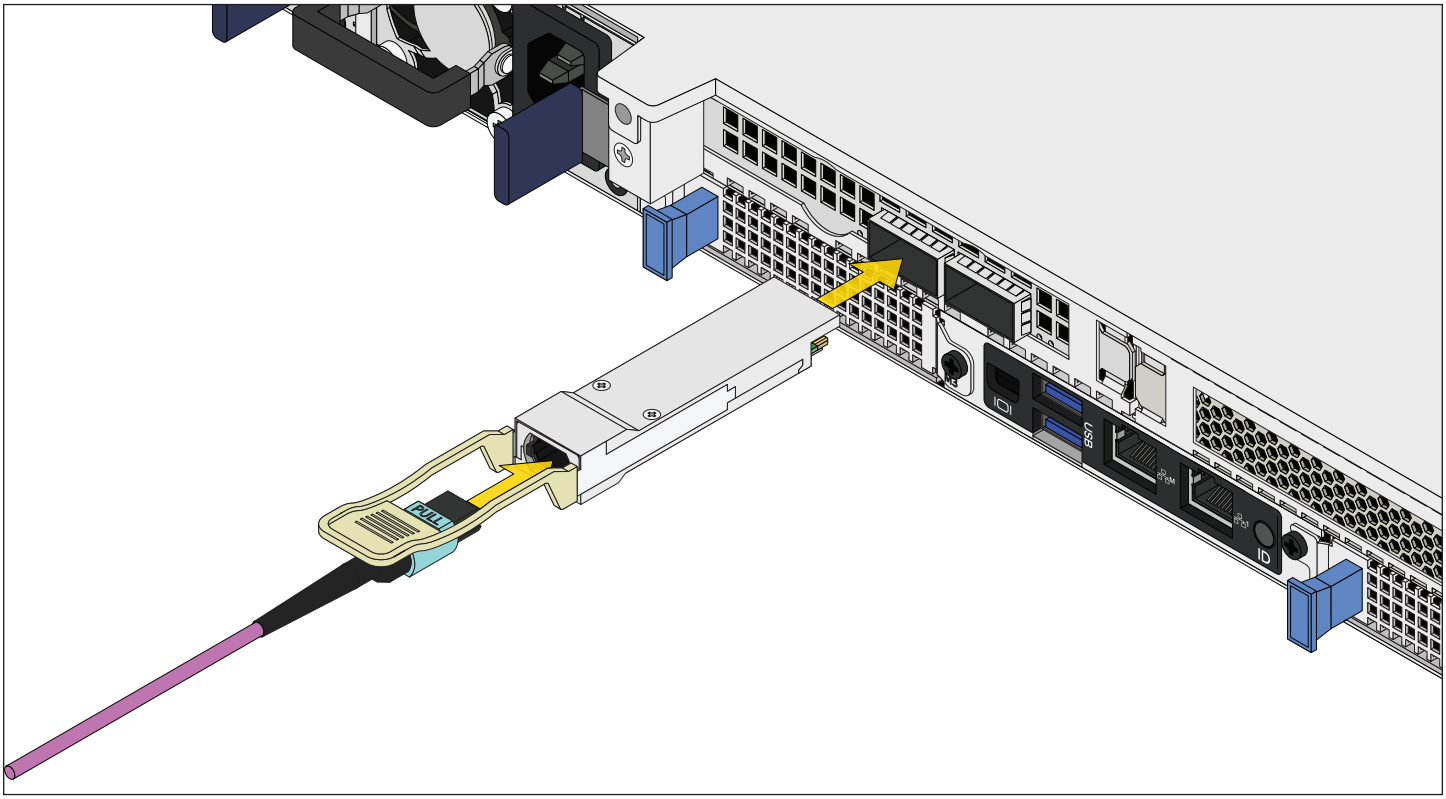


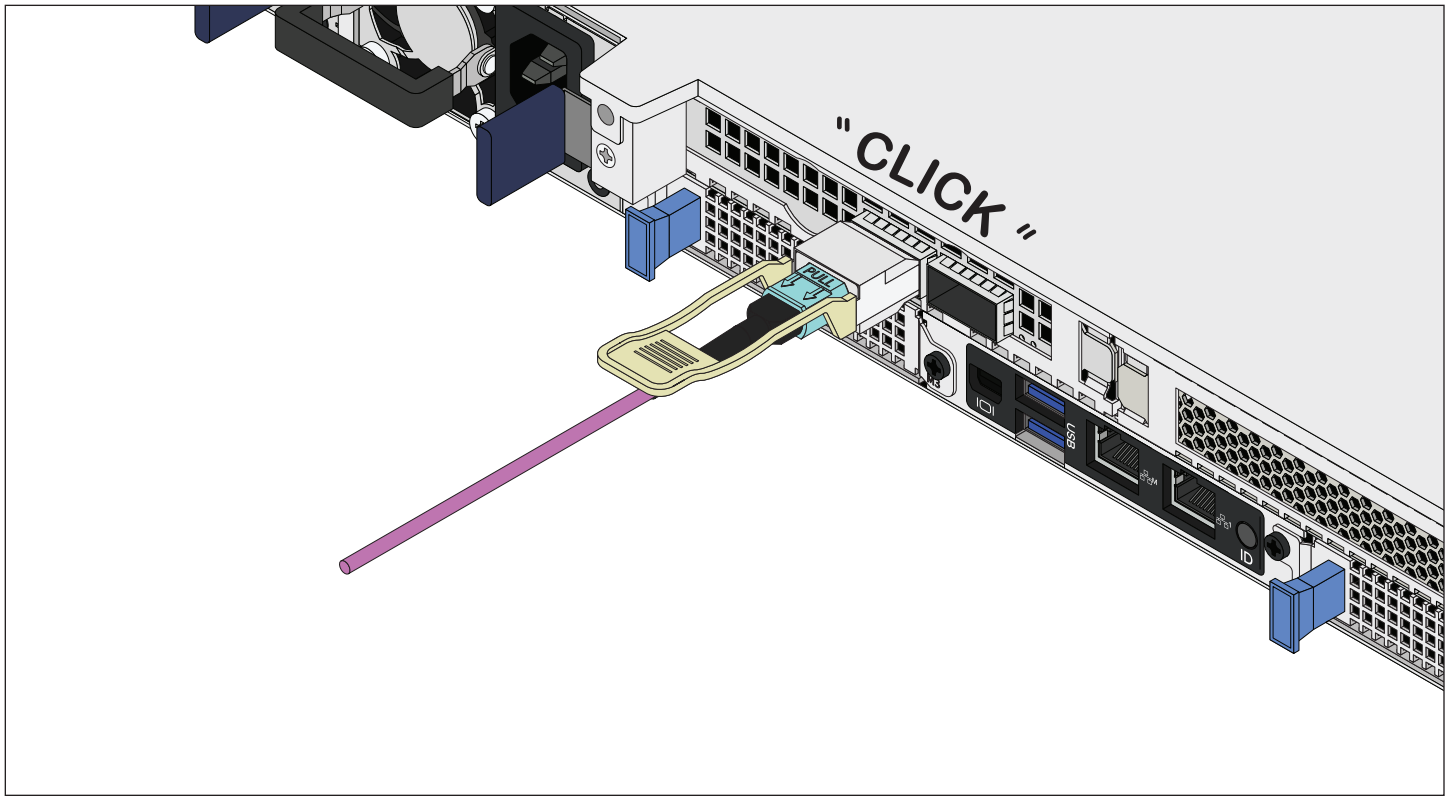

### 7.6.2 400GbE NIC Cabling

If you ordered your system with a 400GbE NIC, you can connect the cable now.

Insert SR4 optics into the port with the gold connectors facing down, then plug the fiber cable into the optics.

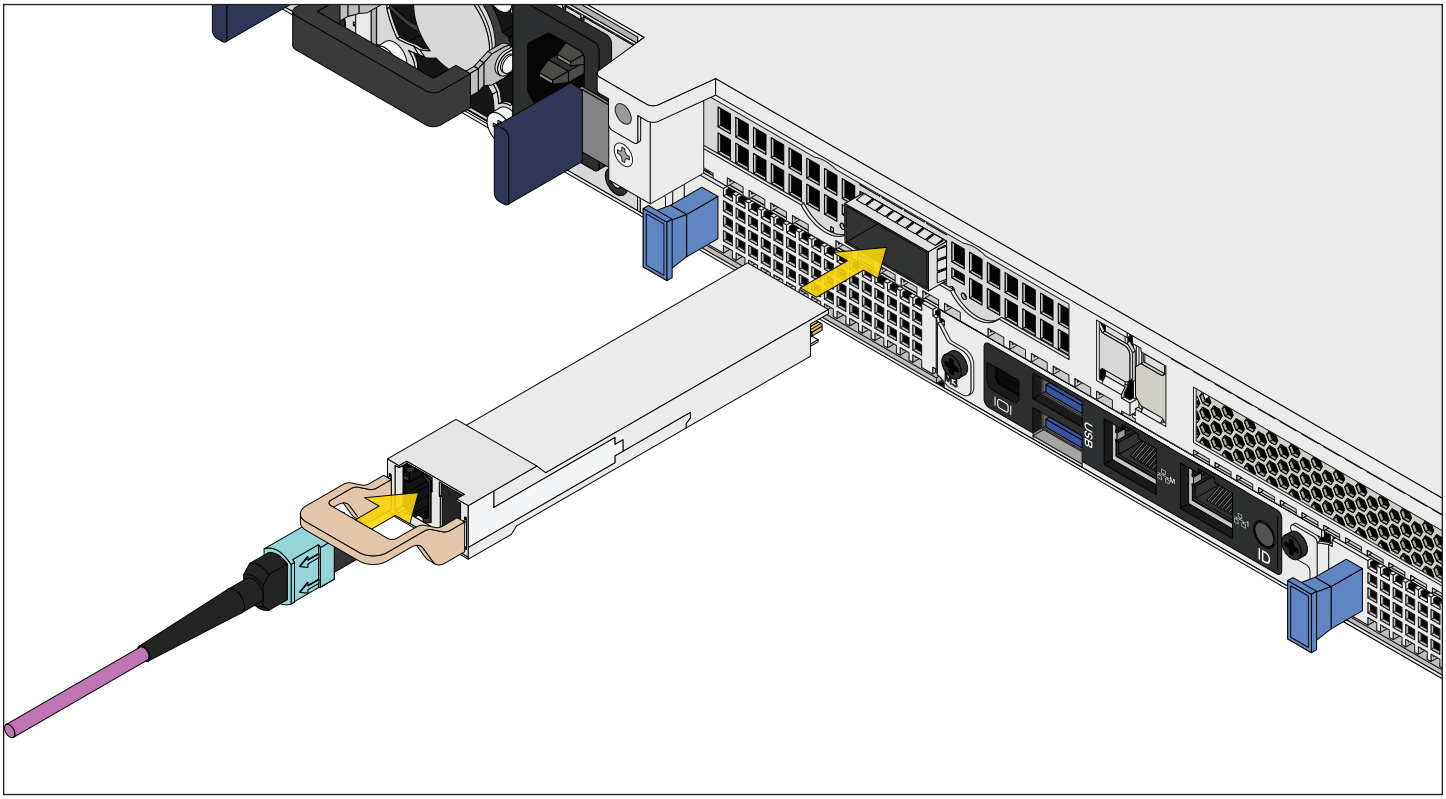

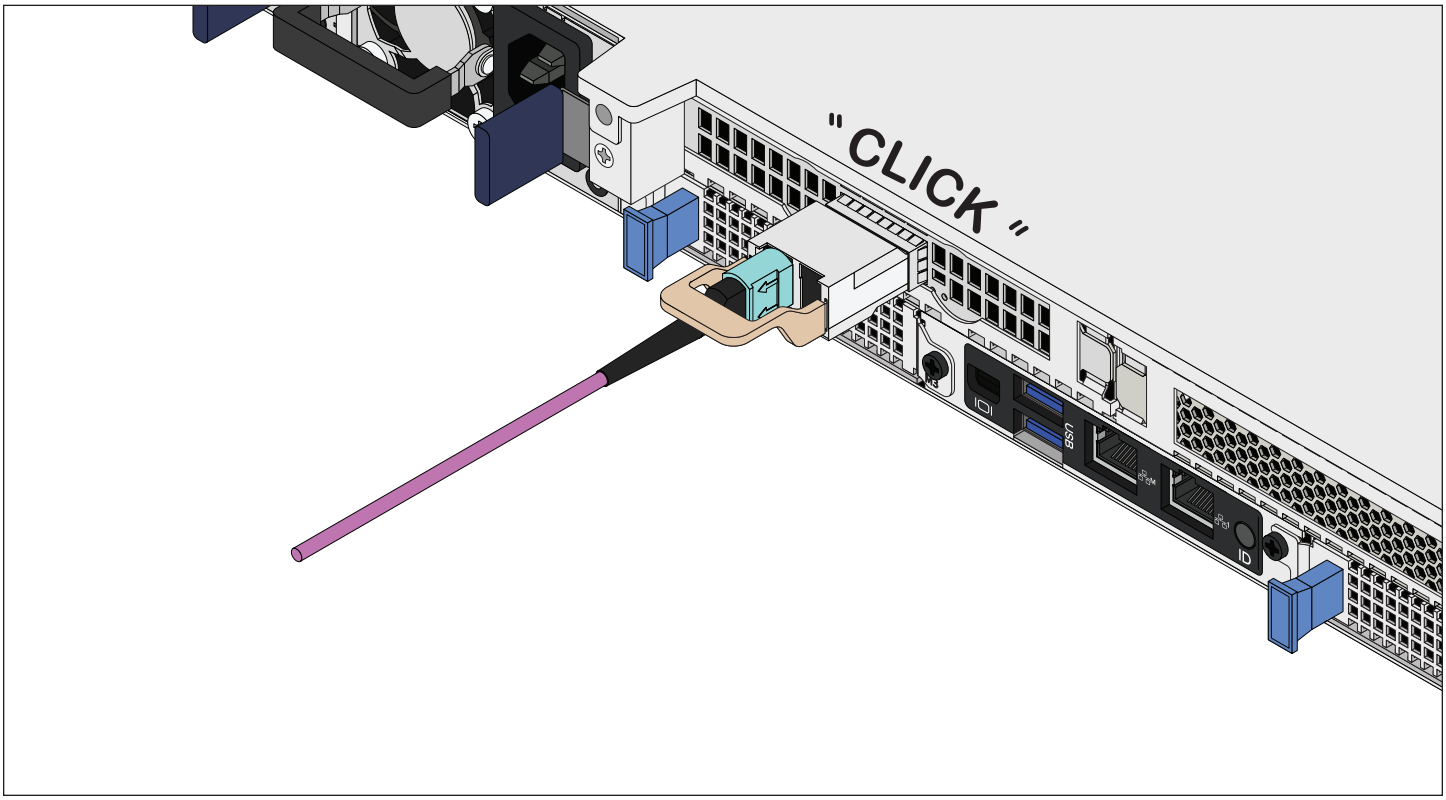

If you ordered your system with a second 400GbE NIC, insert SR4 optics into the port with the gold connectors facing up, then plug the fiber cable into the optics.

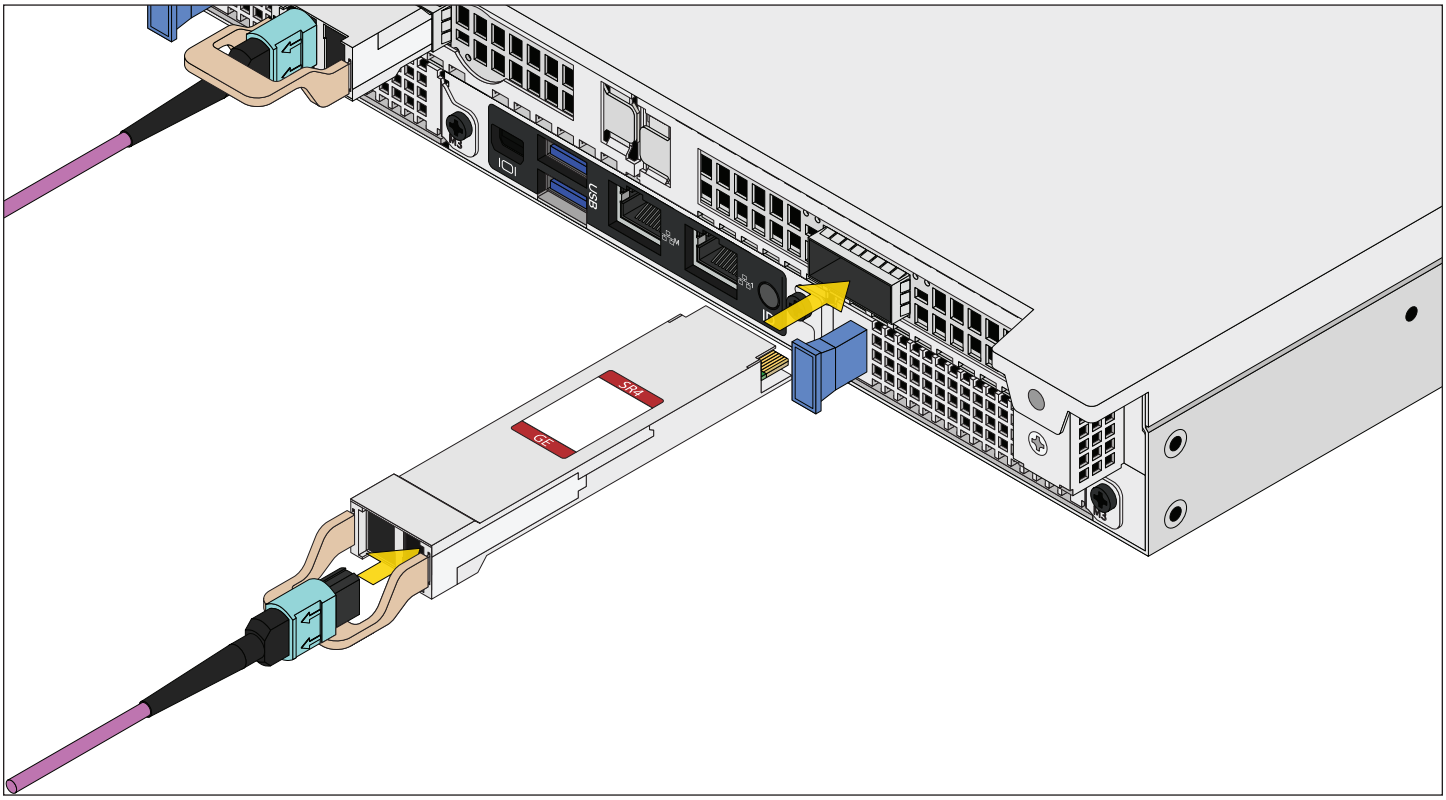


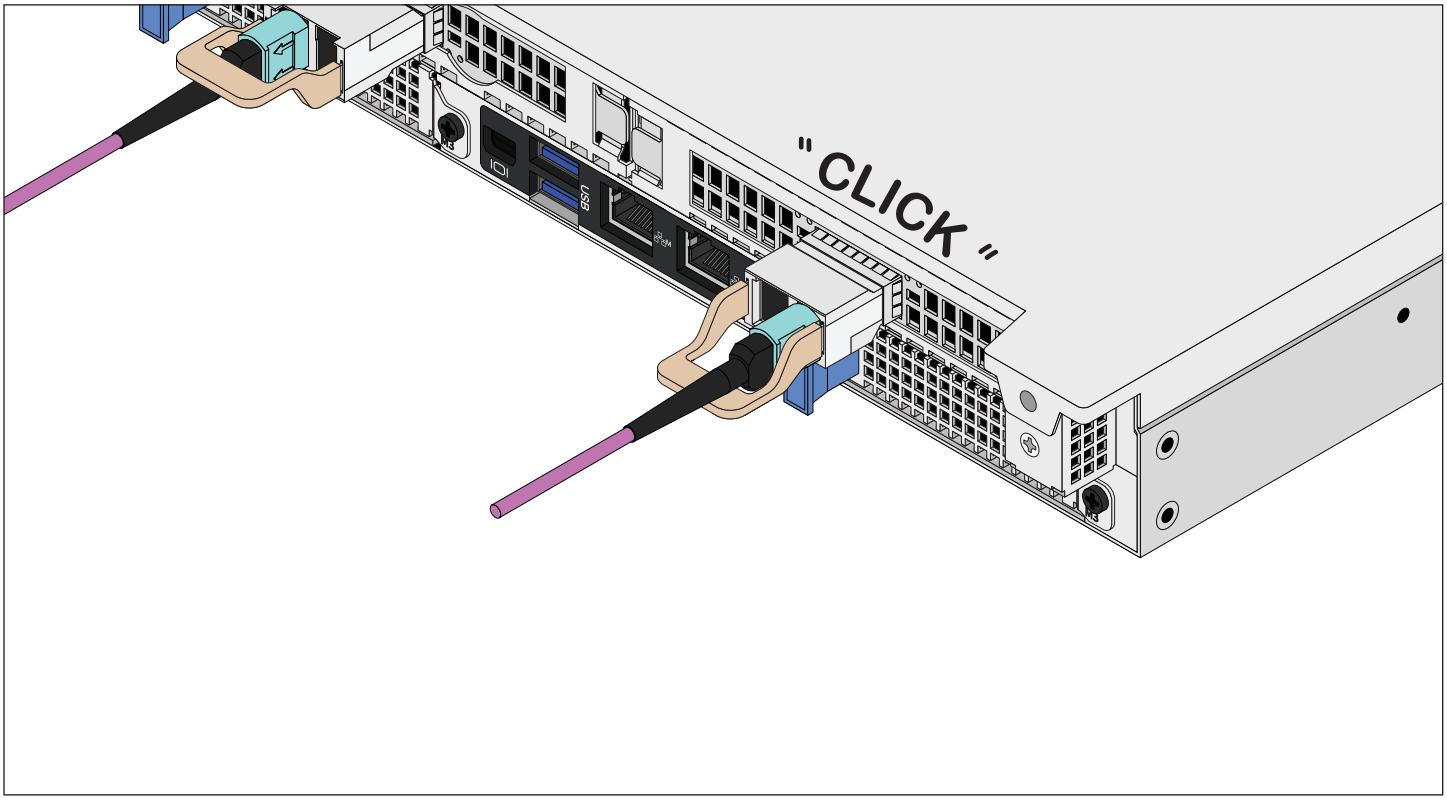

### 7.6.3 SAS Cabling

If you ordered your system with an ES60 expansion shelf, you can set up the SAS3 cables now.

Insert a SAS cable into the **first** SAS port with the blue tab facing down, then insert the other end into the first ES60 IOM/expander.

If you have a second expansion shelf, insert a SAS cable into the **second** port, then insert the other end into the first IOM/expander on the second ES60.

For SAS connection diagrams, refer to the R60 User Manual by scanning the QR code at the end of this document, or refer to your expansion shelf documentation.

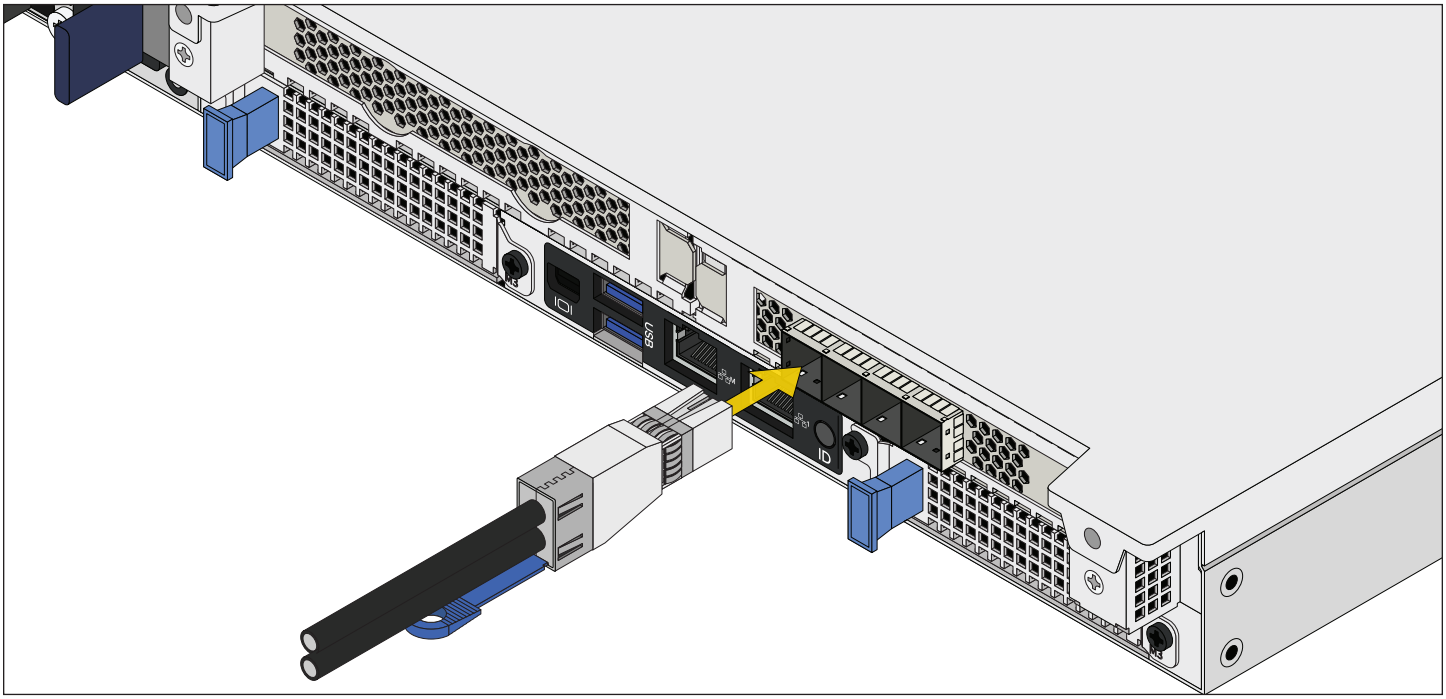

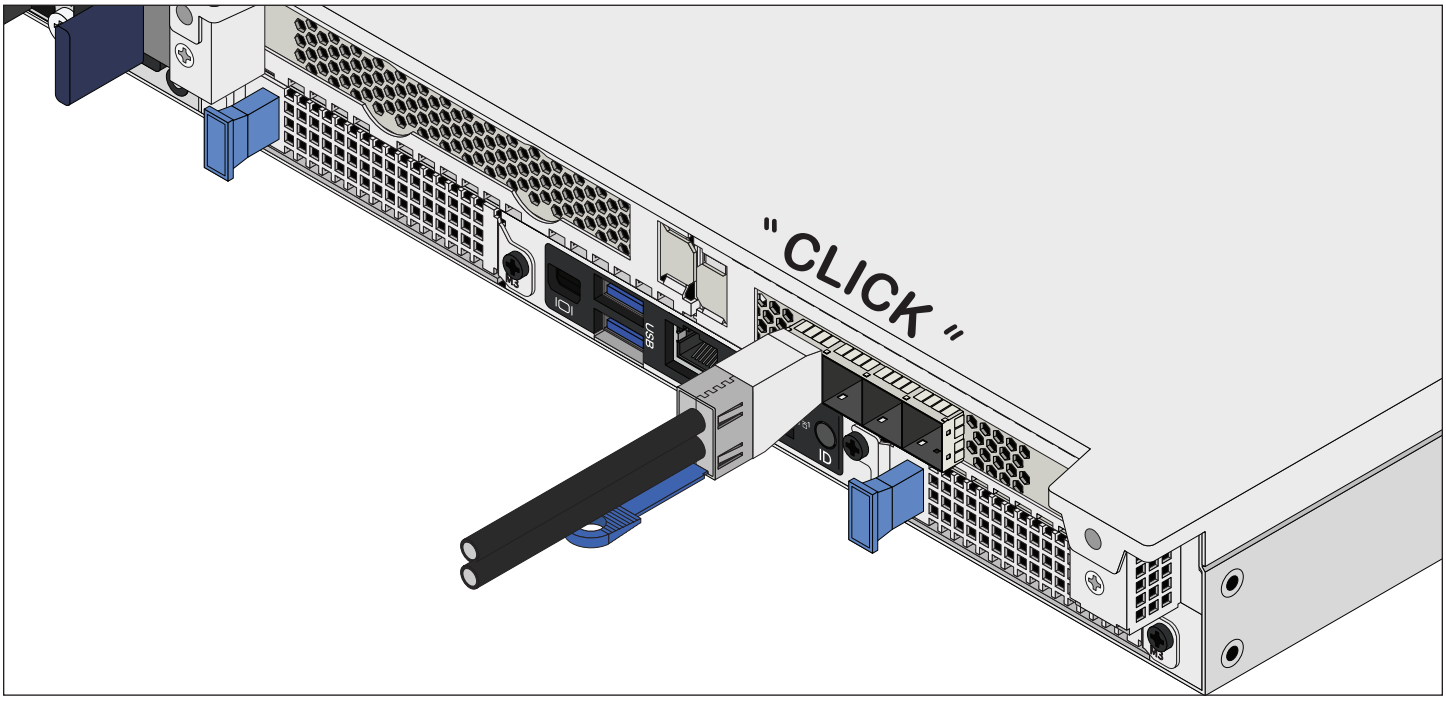

## 7.7 Boot the System

After plugging the power cables into outlets, the system powers on and boots into TrueNAS.

When booted, the system console displays the TrueNAS web UI IP address, which is either preconfigured according to customer guidelines or automatically generated with DHCP.

Enter the IP address into a browser on a computer on the same network to access the web user interface.

See your welcome email or the password stickers on each controller at the rear of the unit for login credentials.

# 8 Storage Expansion

**Important - Expansion Configuration**

When setting up storage expansion connections, please adhere to the wiring examples below. Connecting Expansion Shelves incorrectly causes errors. Never cable a single controller to different IOMs/expanders on the same shelf.

## 8.1 ES24N

R60 connected to one ES24 shelf.

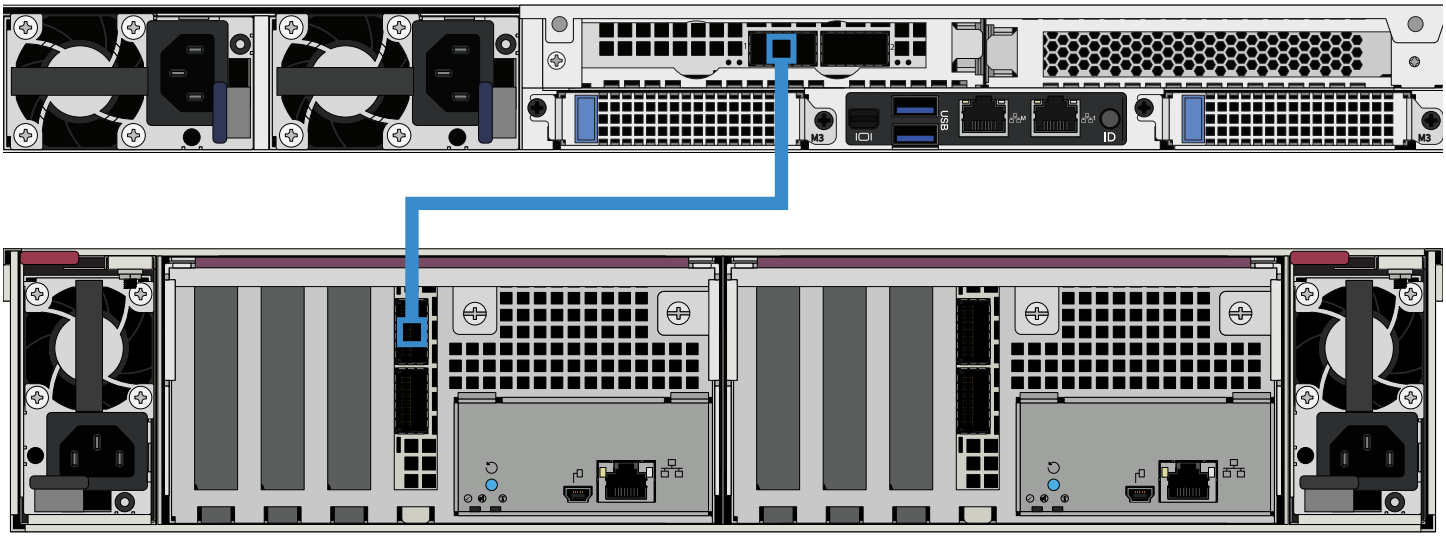


R60 connected to two ES24N shelves.

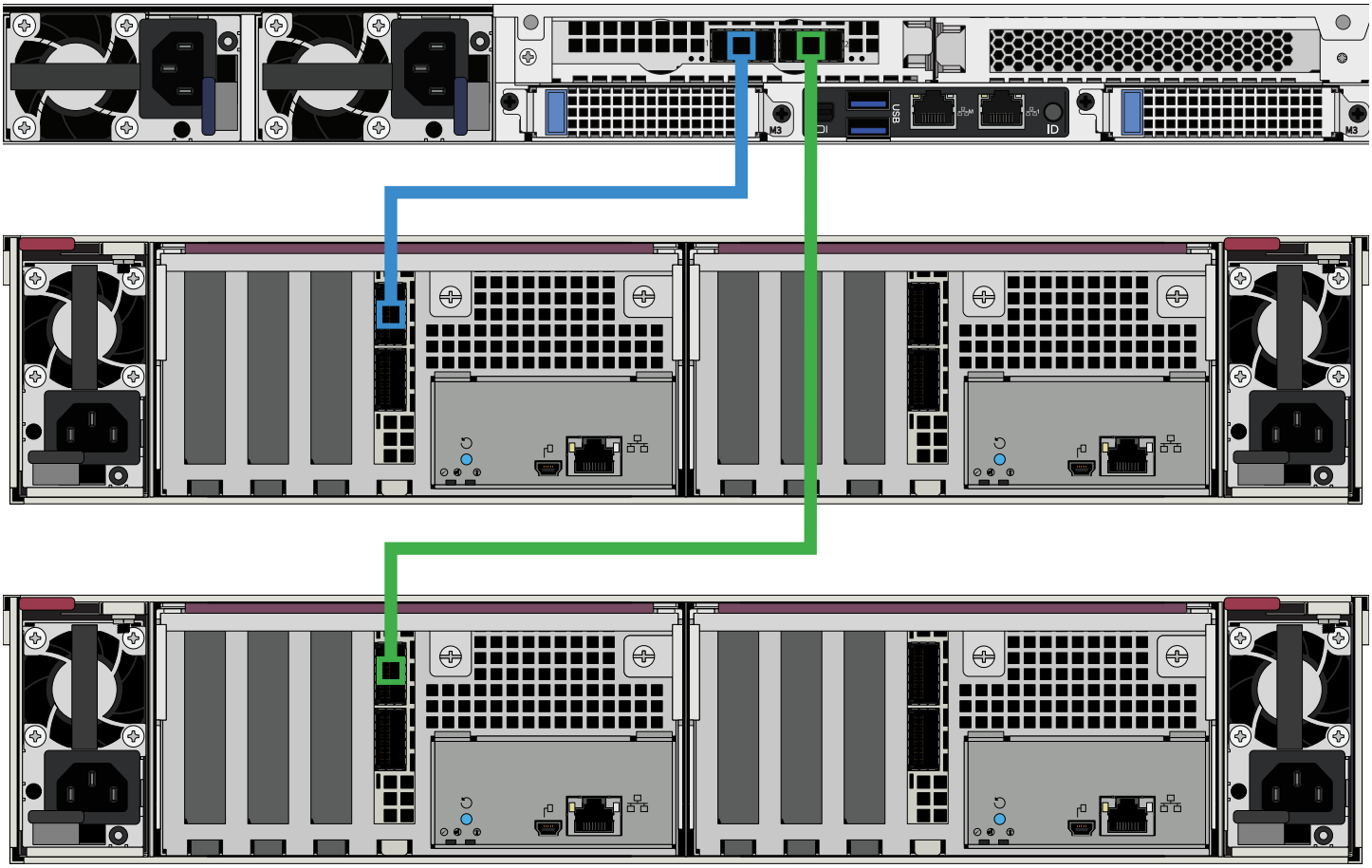

## 8.2 ES60

R60 connected to one ES60 shelf.

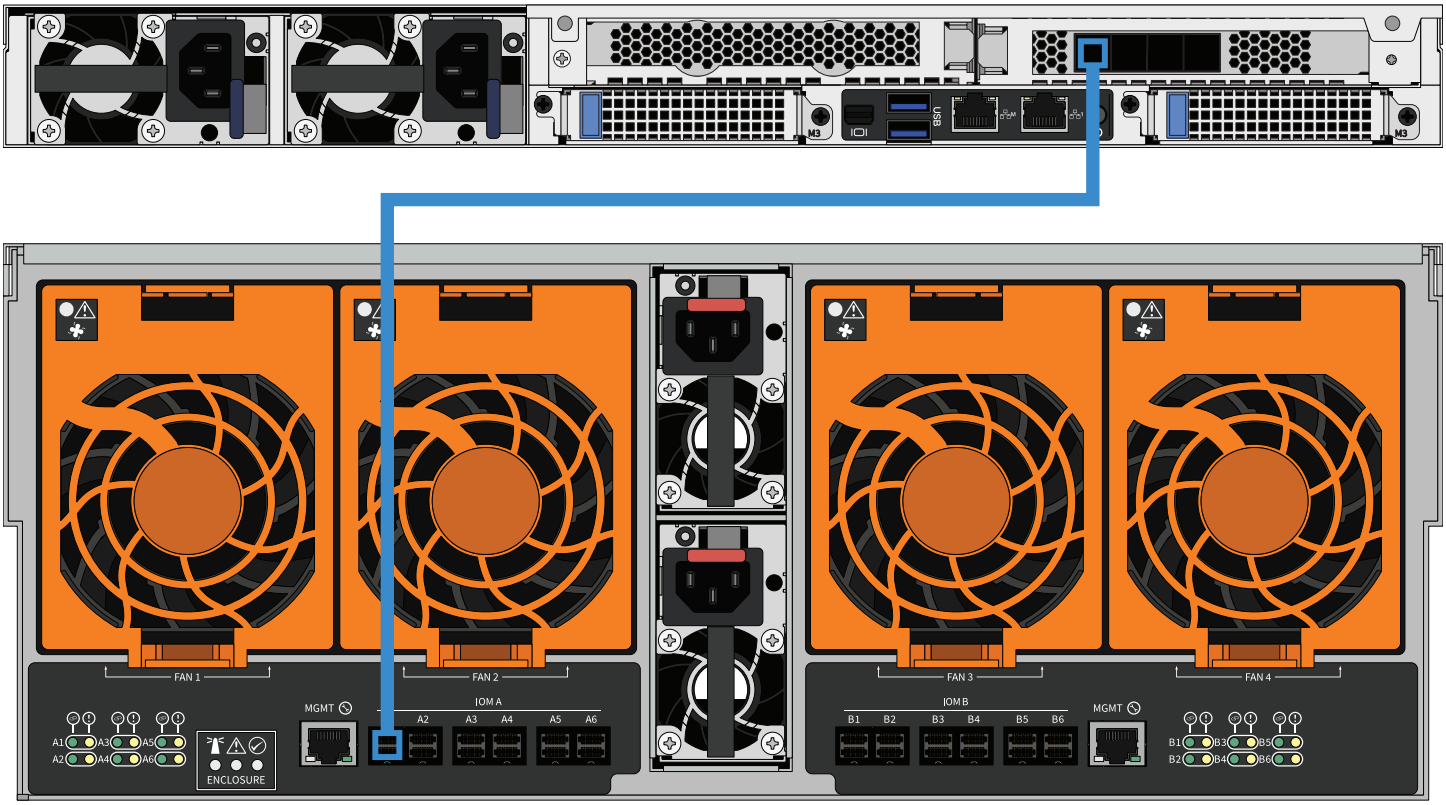

R60 connected to two ES60 shelves.

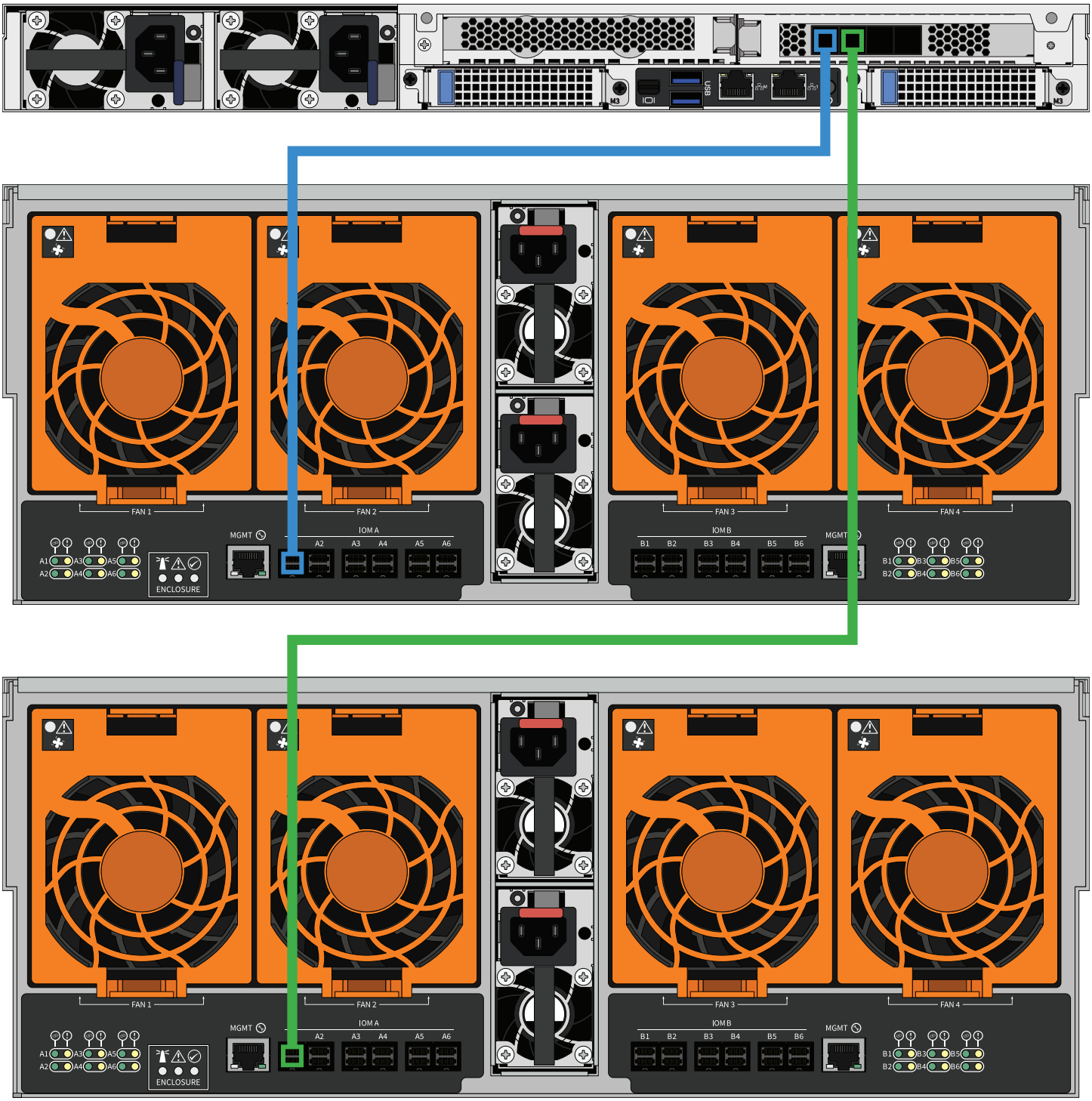

# 9 Unracking Procedure

## 9.1 Uninstall Cables

Disconnect both power cables from the PSUs, then disconnect all USB and networking cables.

### 9.1.1 Disconnect 100GbE NIC Cabling

Pull the blue release tab on the cable to remove it from the optics, then pull the release handle on the optics and gently remove them from the network port.

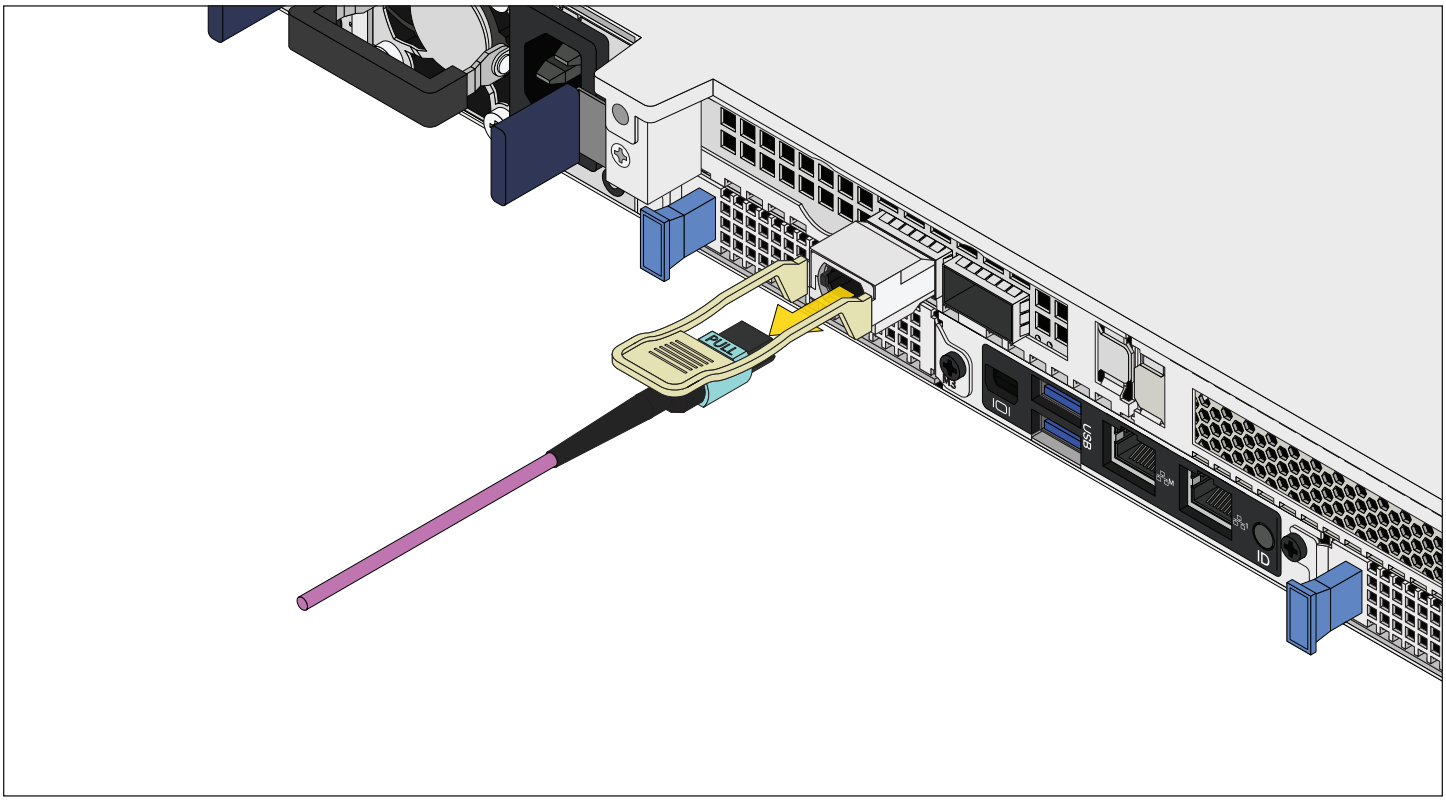


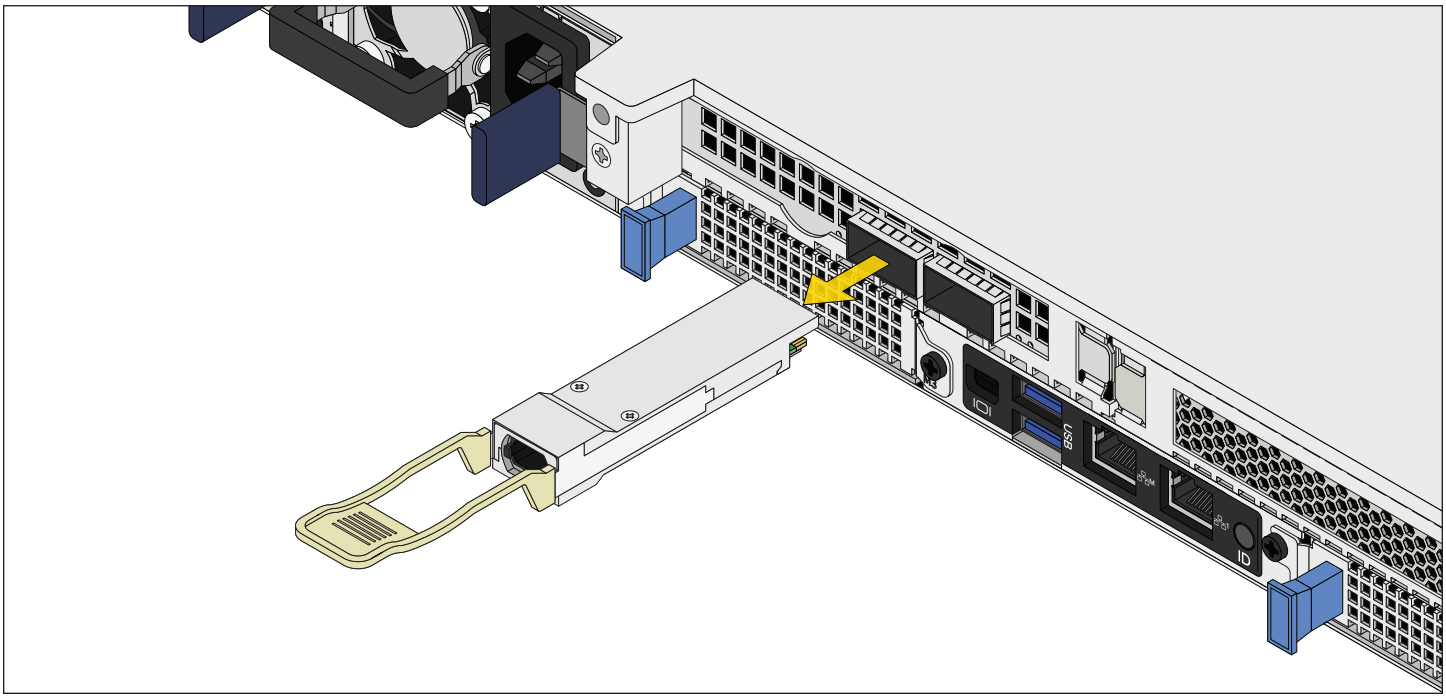

### 9.1.2 Disconnect 400GbE NIC Cabling

Pull the blue release tab on the cable to remove it from the optics, then pull the release handle on the optics and gently remove them from the network port.

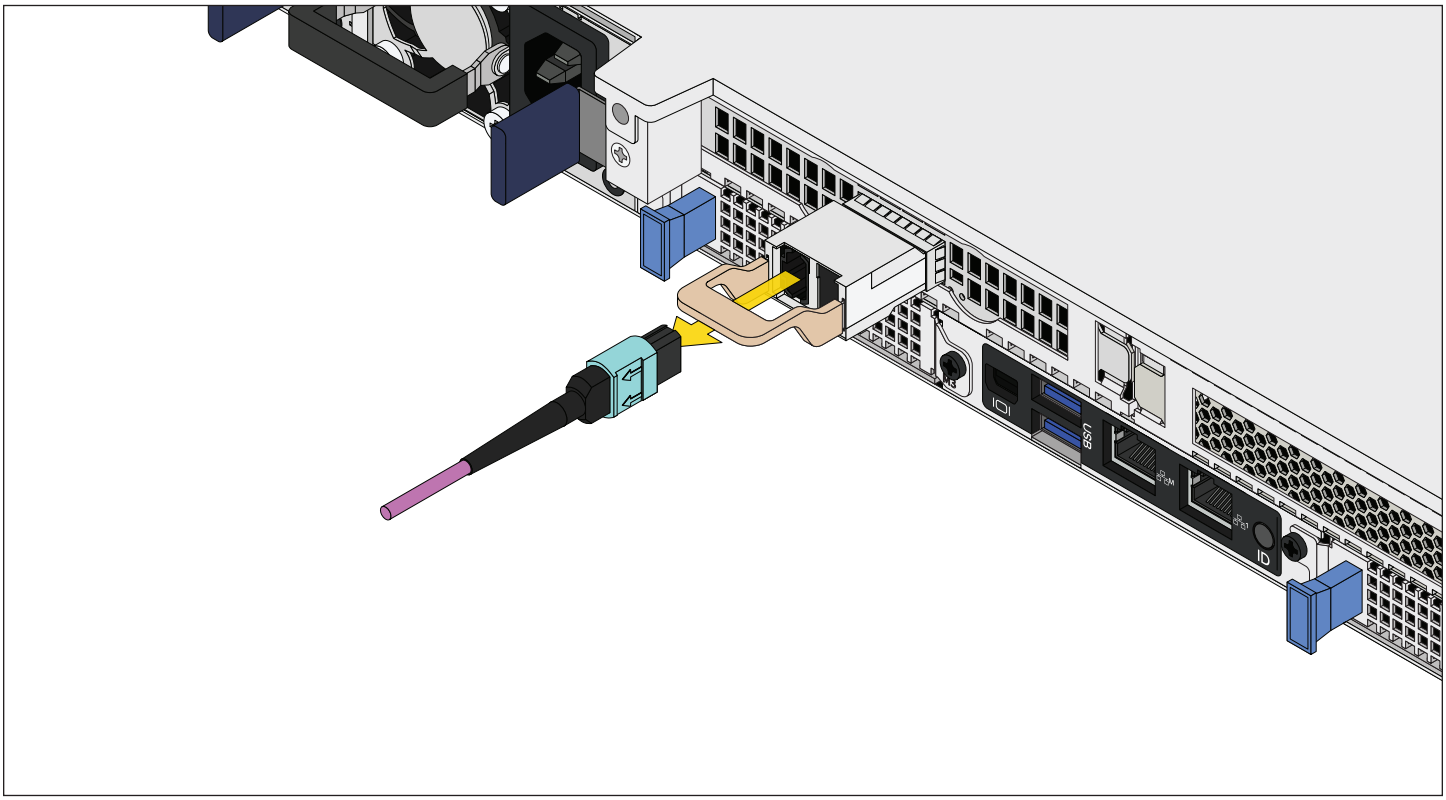


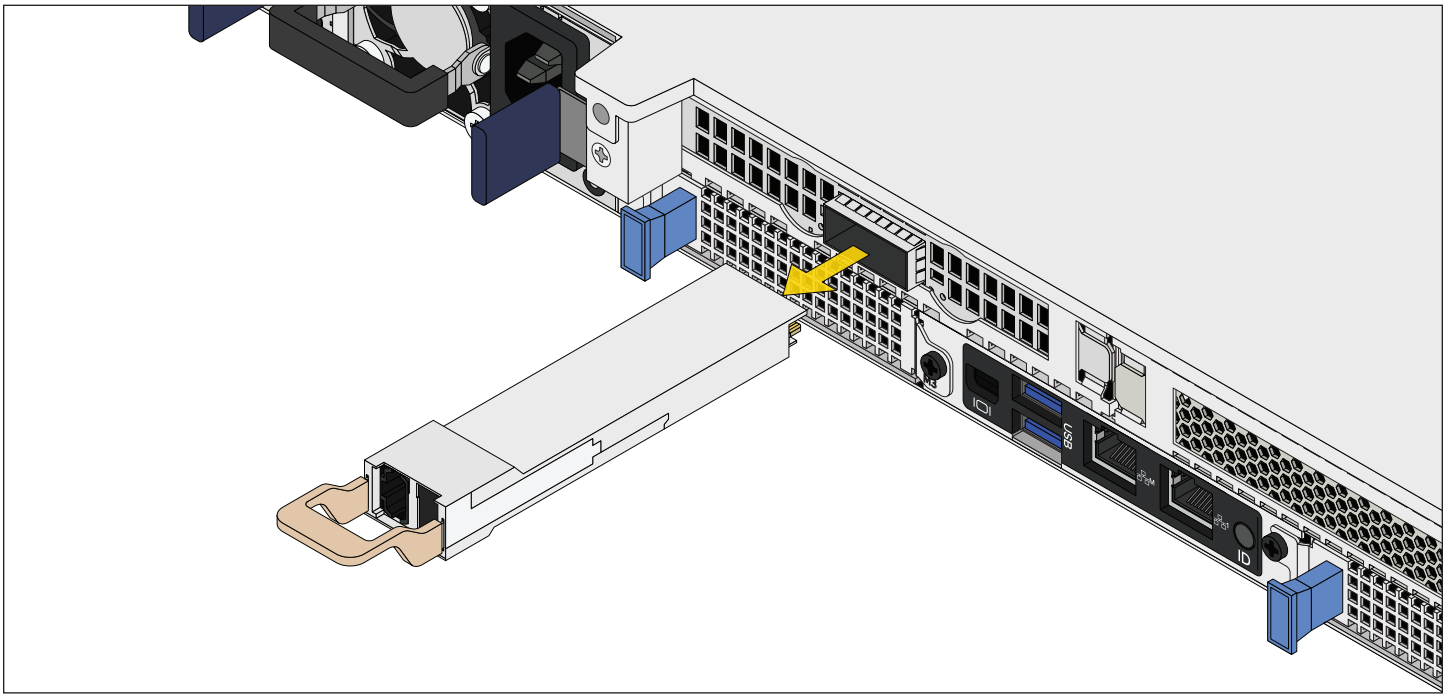

### 9.1.3 Disconnect SAS HBA Cabling

Pull the blue tab on the bottom of the SAS cable to release it from the SAS port.

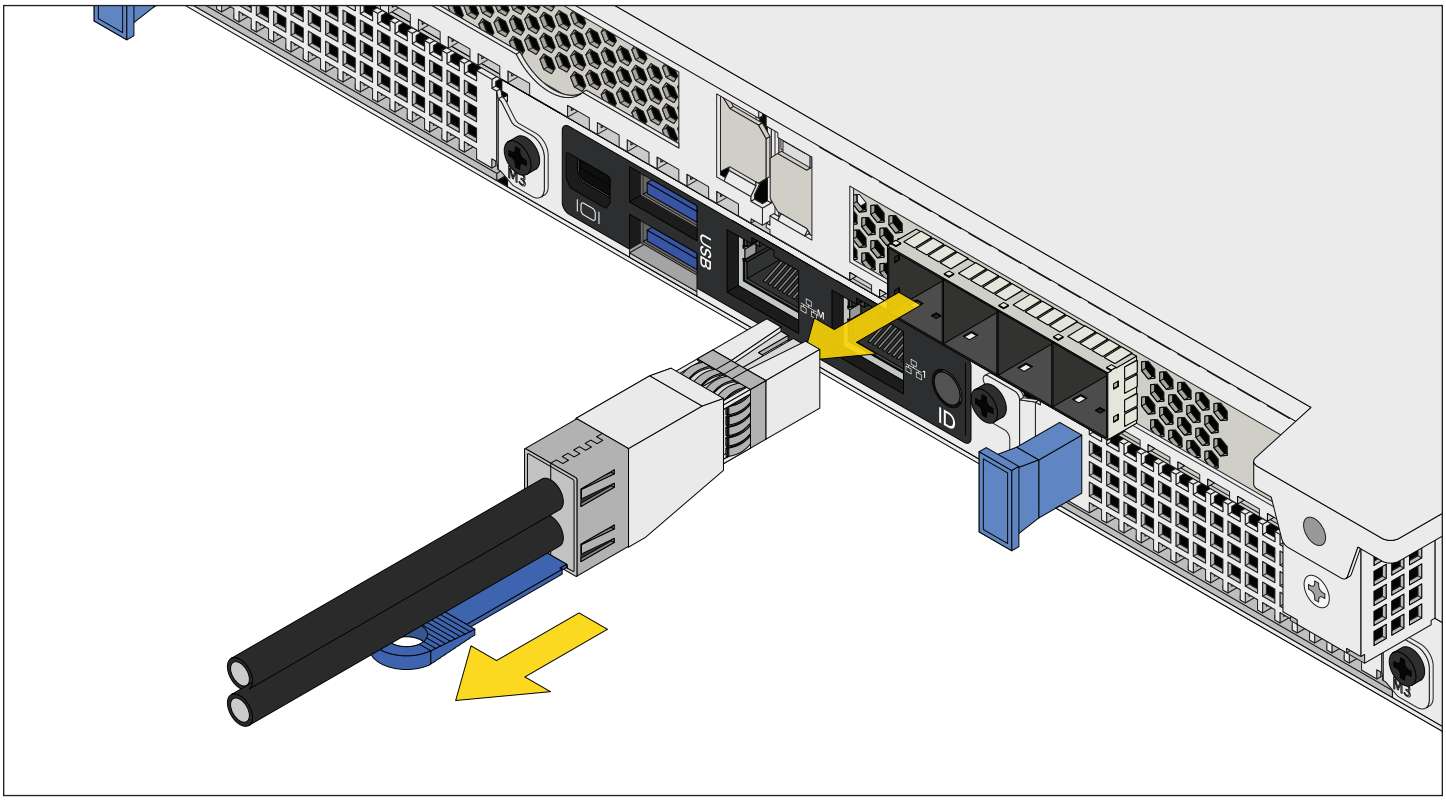

## 9.2 Release the System from the Rack

Open the doors on the R60 ears and loosen the captive screws to release each system ear from the rack.

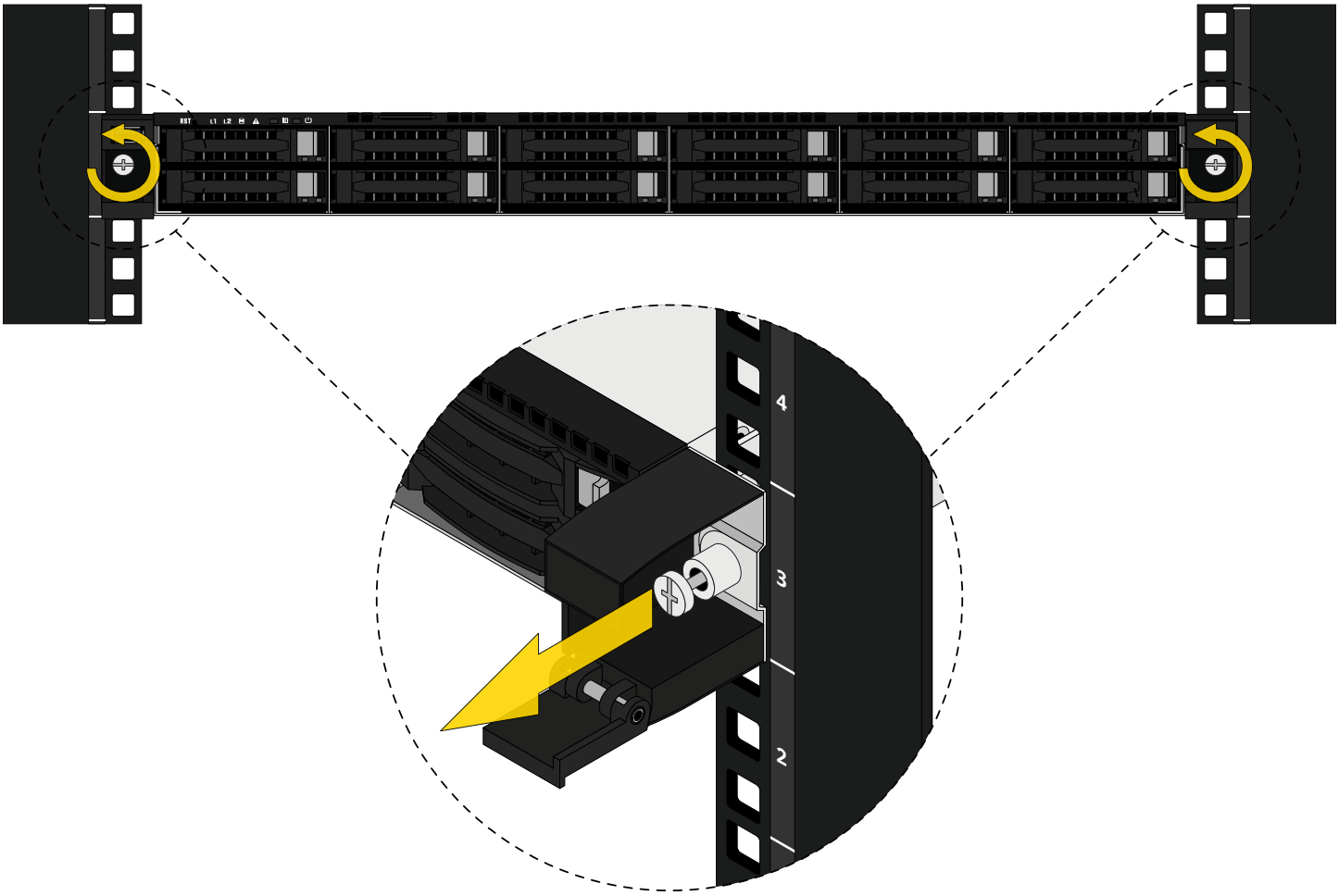

## 9.3 Remove the System from the Rack

Team-lift the system and align the chassis rails with the rack rails. Slide the ends of the chassis rails into the rack rails and push the system into the rack until the metal safeties click and lock.

Pull the R60 out of the rack until the rails lock, then pull the blue release tabs towards the front of the system and finish pulling the system out of the rack.

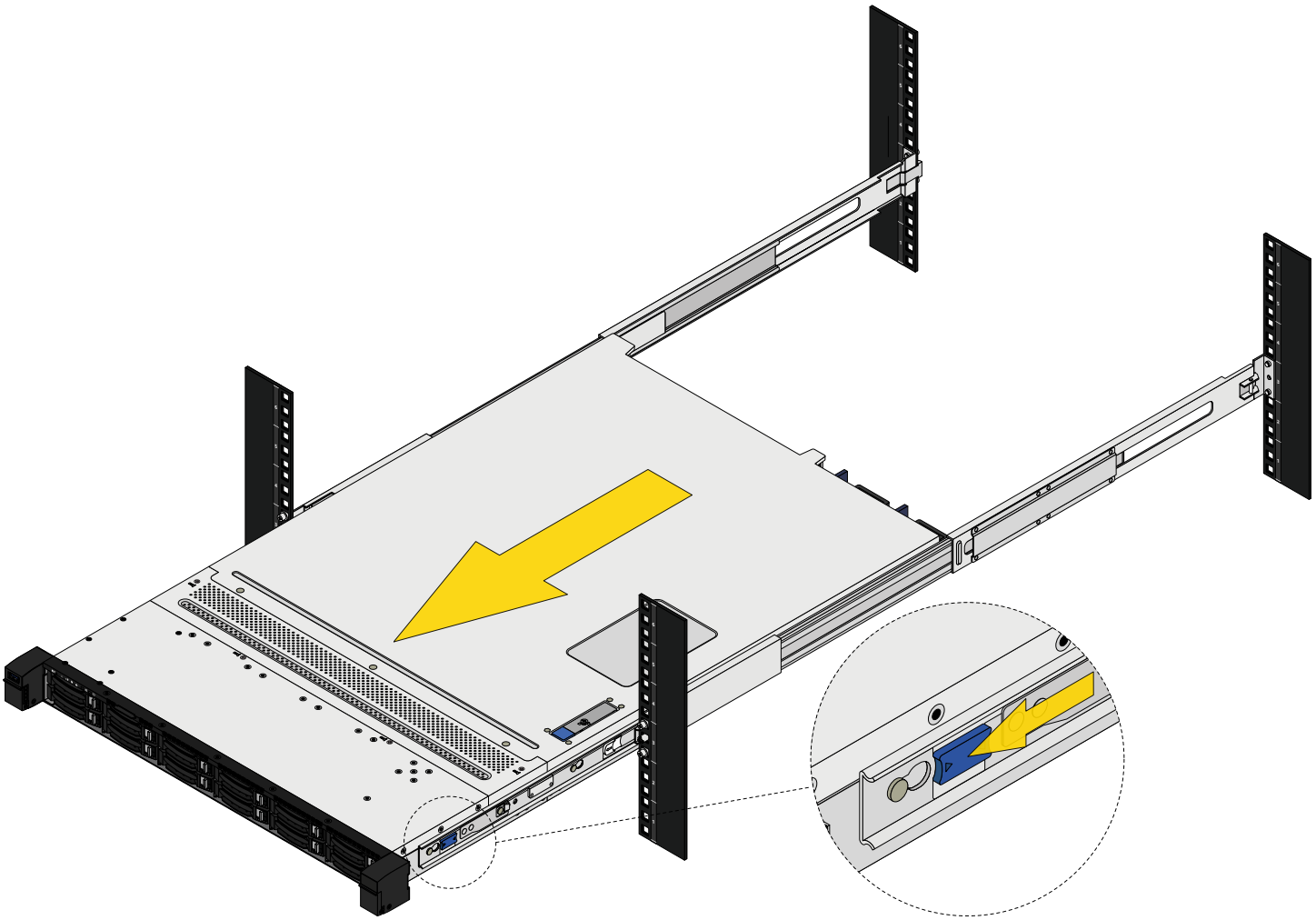

## 9.4 Uninstall the Rack Rails from the Rack

Remove the M5 screw holding the rack rail to the rear rack post, then, press the spring latch plate on each side of the rail to release it from the rack, the remove the rail from the rack.

Repeat for the other rack rail.

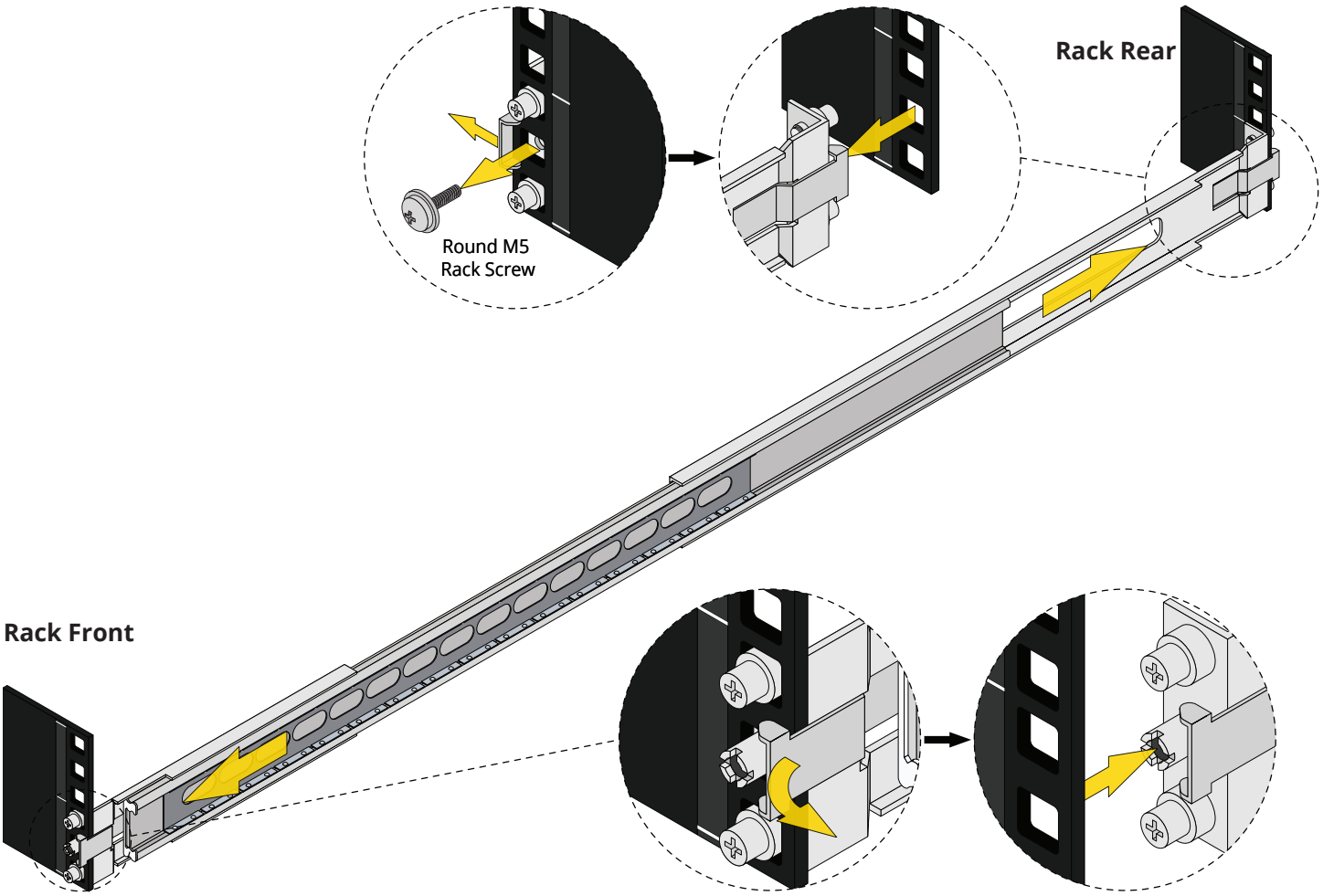

## 9.5 Uninstall the Chassis Rail from the System

Remove the round M4 screws from the chassis rails, then pull the retention latches away from the chassis rails and slide them toward the front of the system. Pull the chassis rails over the mounting pegs and away from the system.

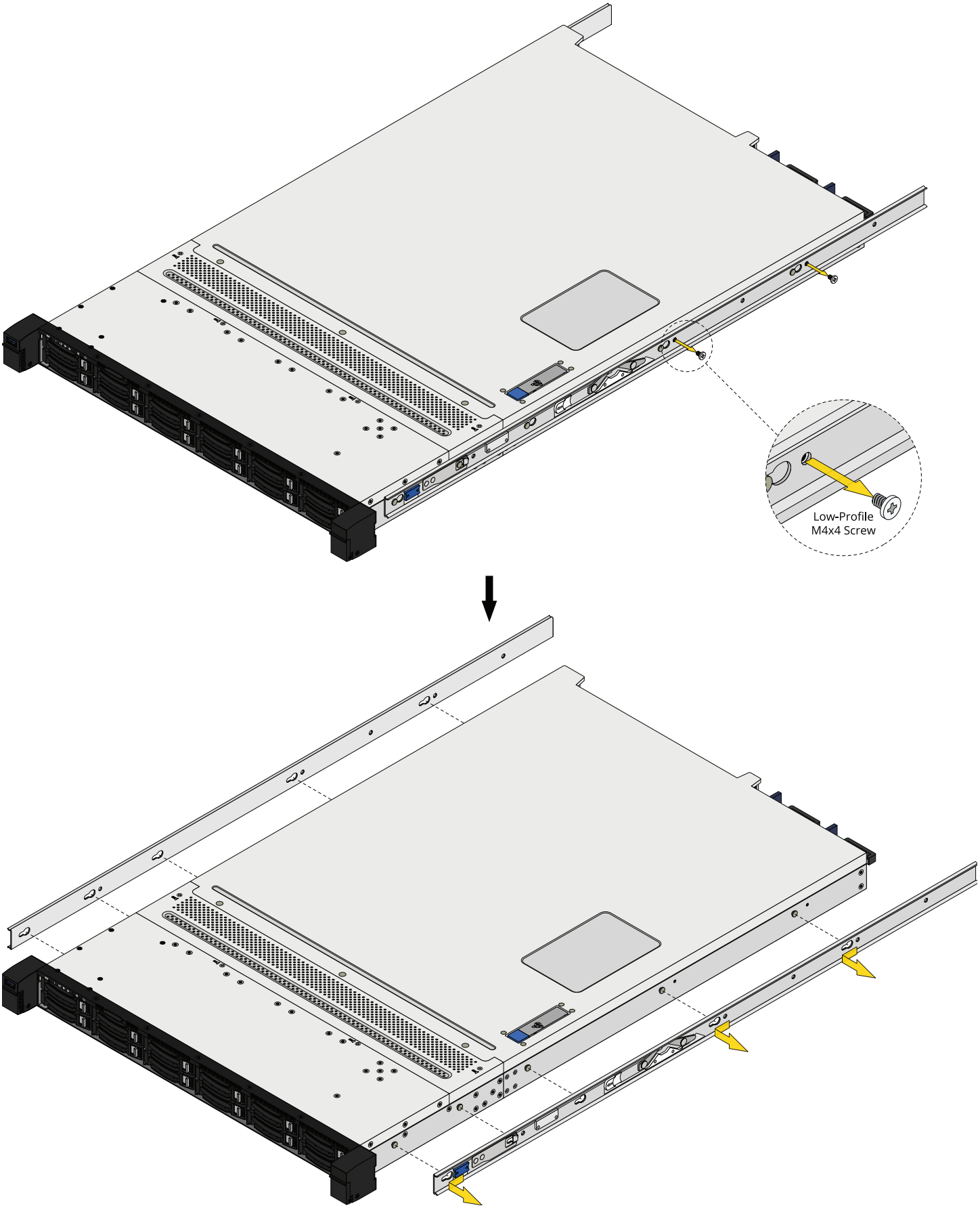

# 10 Drive Replacement

## 10.1 Remove Drive Tray

To remove a drive tray, push the blue button on the right side of the tray to release the locking arm. Gently open the arm until it stops, then pull the tray out from the system.

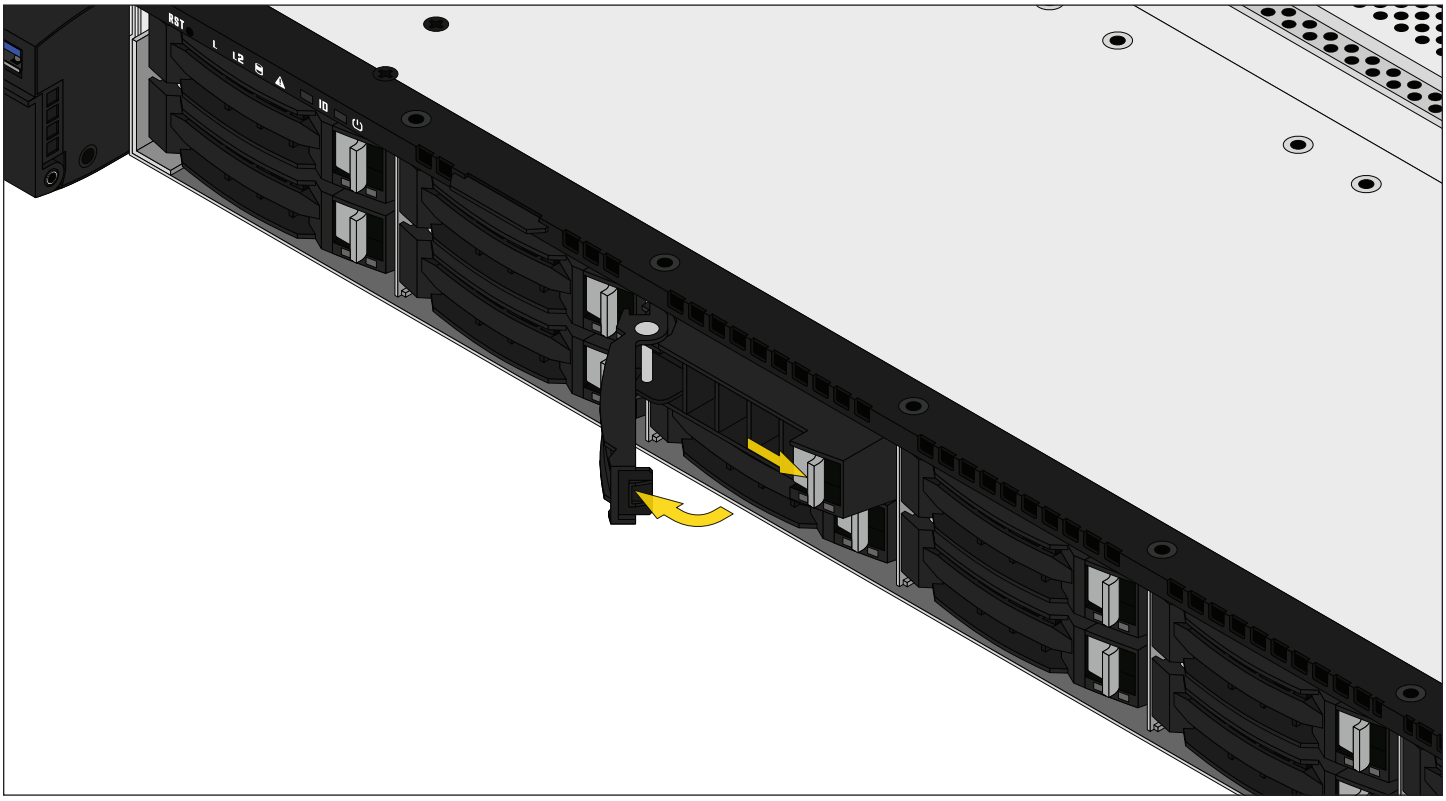

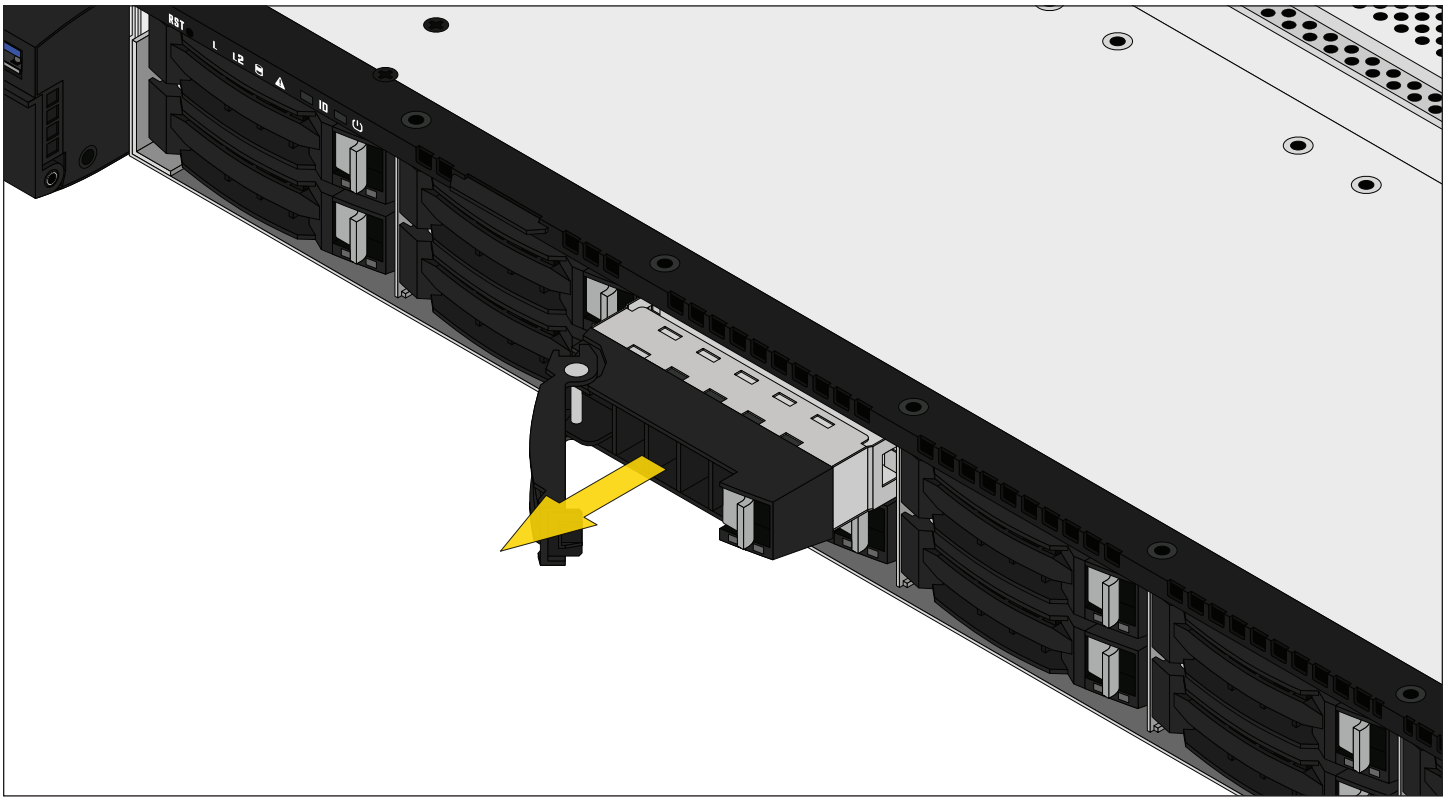

## 10.2 Replace NVMe Drive

Push the side attached to the flexible pegs from underneath the tray, then lift the drive out.

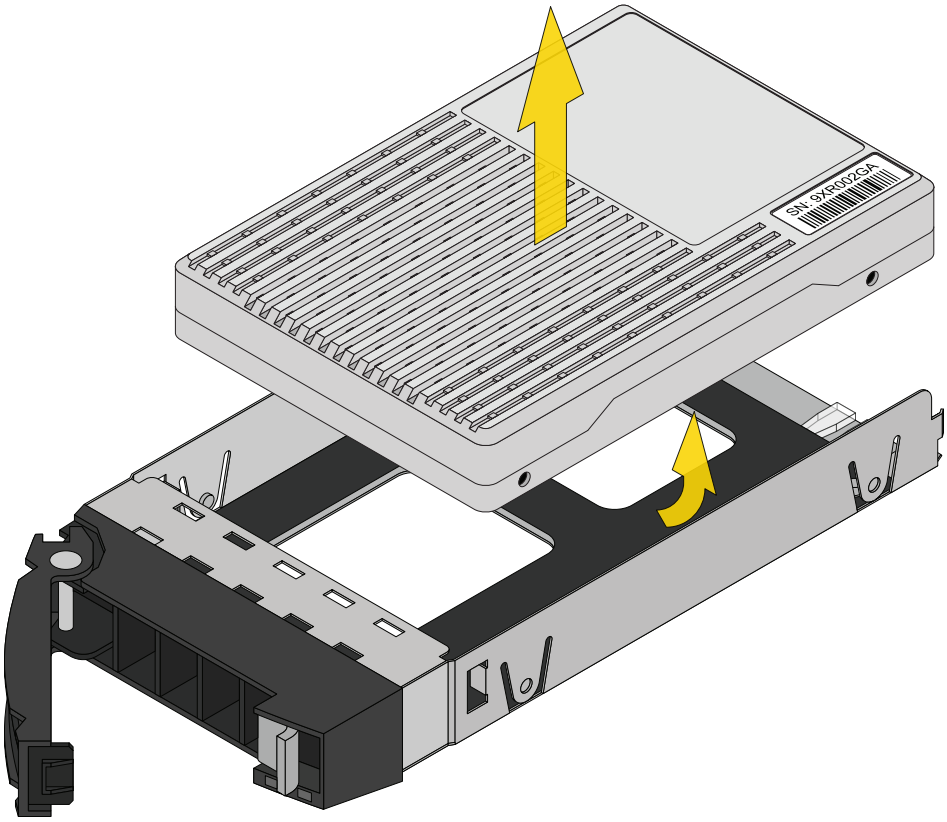


To install a new drive, ensure the drive connectors point out the back of the tray and push the drive side screw holes into the fixed retention pegs on one side of the tray. Push the other side of the drive down into the flexible retention pegs to secure the drive.

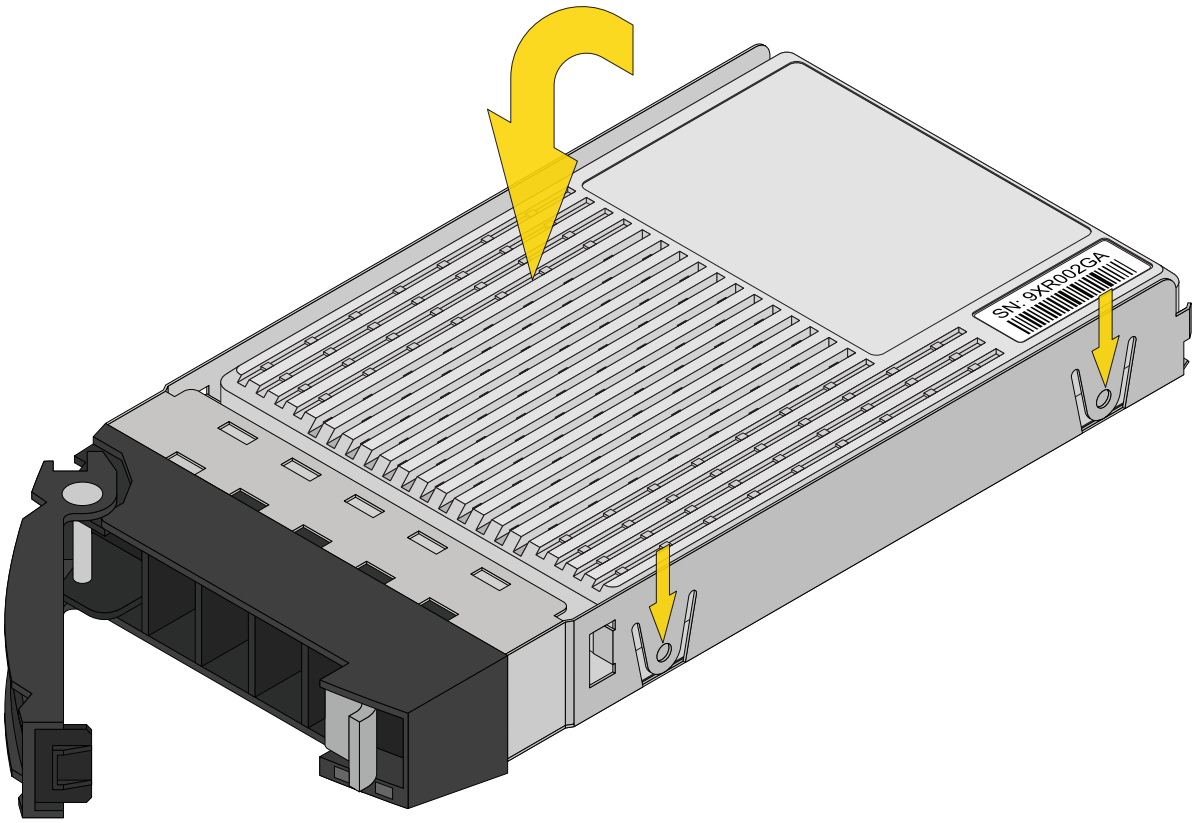

## 10.3 Install Drive Tray

Align the tray with an empty slot and gently push it in until it stops, then close the locking arm.

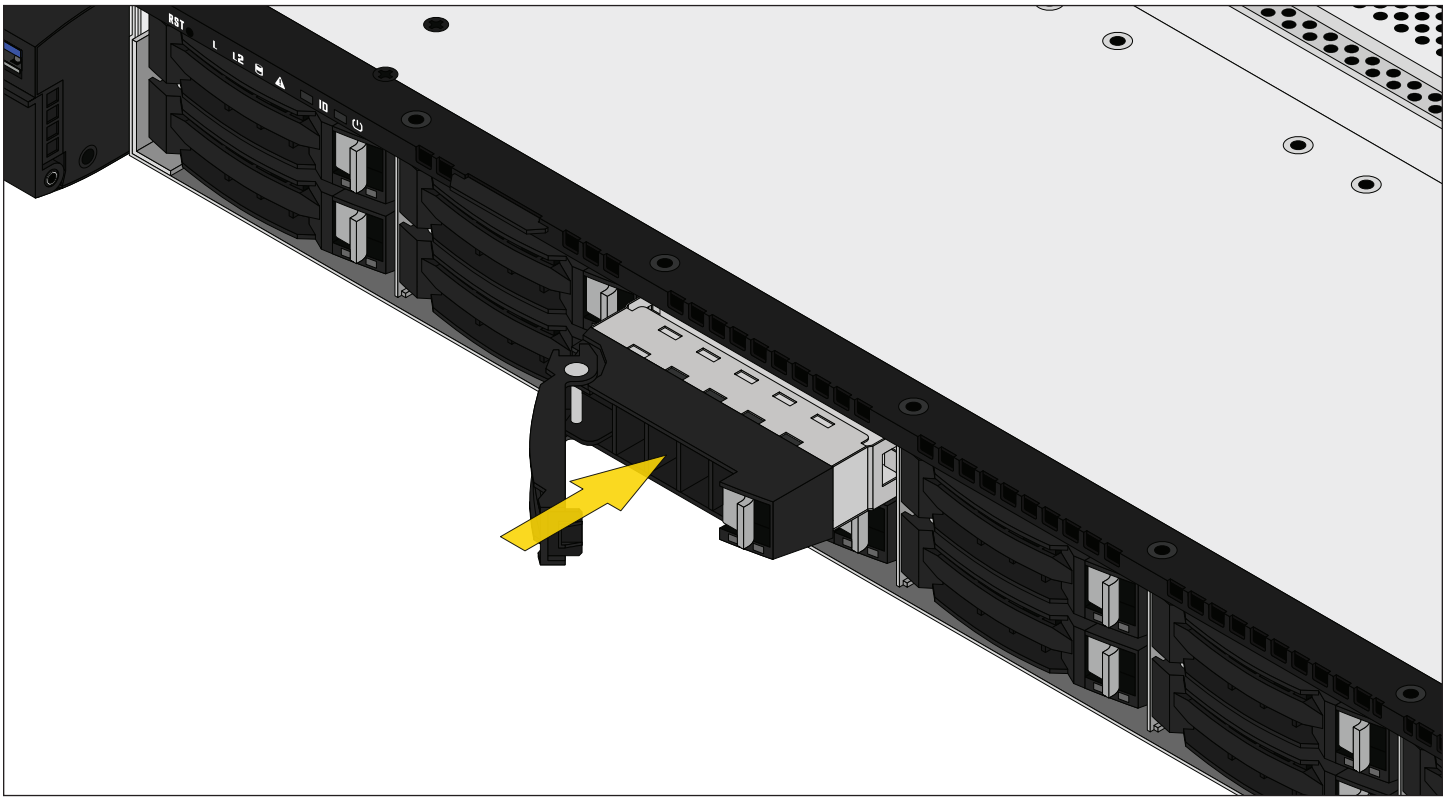


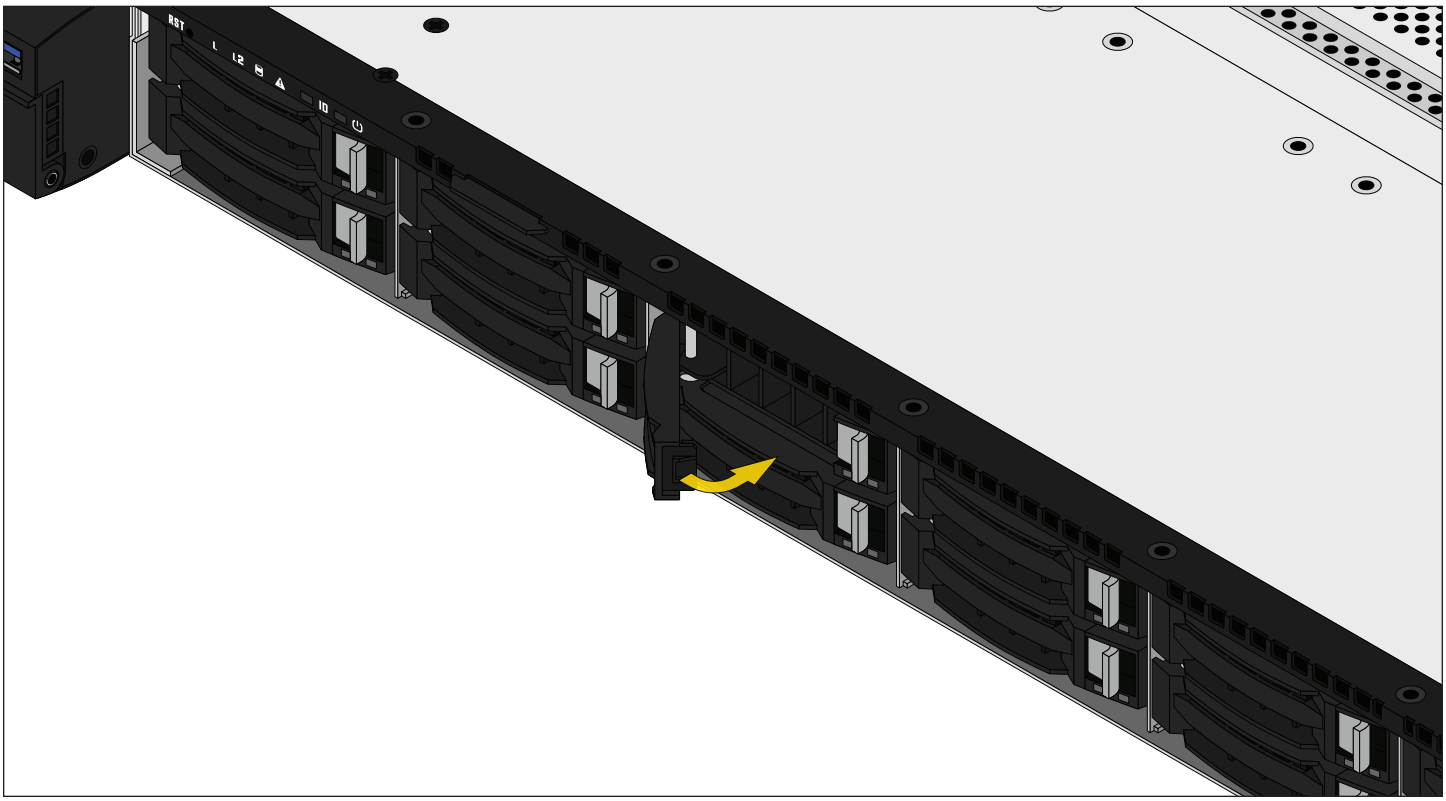

# 11 Additional Resources

The TrueNAS Documentation Hub has complete software configuration and usage instructions. Click **Guide** in the TrueNAS web interface or go directly to:

https://www.truenas.com/docs

Additional hardware guides and articles are in the Documentation Hub's Hardware section:

https://www.truenas.com/docs/hardware

The TrueNAS Forums provide opportunities to interact with other TrueNAS users and discuss their configurations:

https://forums.truenas.com/

# 12 Contact Us

Having issues? Please contact TrueNAS Enterprise Support to ensure a smooth resolution.

| Contact Method | Contact Options |
|---|---|
| Web | https://www.truenas.com/support |
| Email | support@truenas.com |
| Telephone | Monday-Friday, 6:00AM to 6:00PM Pacific Standard Time:<br>• US-only toll-free: **1-855-473-7449** option 2<br>• Local and international: **1-408-943-4100** option 2 |
| Telephone | Telephone After Hours (24x7 Gold Level Support only):<br>• US-only toll-free: **1-855-499-5131**<br>• International: **1-408-878-3140** (International calling rates will apply) |
| Address | iXsystems, Inc. dba TrueNAS - 541 Division St, Campbell, CA 95008, USA |